Data sheet del prodotto

Nr. Art. 27.334.1653.0

Pin strip PCB 8113 SEG / 16 / 32 G OB

Nr. Art.	27.334.1653.0
EAN	4015573999077
Quantità per ordine	50 Pezzo

Approvazioni

Dati tecnici

Generale

Passo	5 mm
Processo a saldare	Saldatura a onda
Imballo	Scatola
Numero di poli	32
Numero di piani	2
Siglatura	No
Fissaggio	senza
Direzione di inserzione rispetto al c.s.	90°

Dati tecnici

Corrente nominale	10 A
Categoria di sovratensione I	400 V
Categoria di sovratensione II	400 V
Categoria di sovratensione III	250 V
Tensione nominale di tenuta	4 kV

Dati tecnici UL/CSA

Tensione UL	300 V
Field wiring di corrente	10 A
Factory wiring di corrente	10 A
Tensione CSA	300 V
Corrente CSA	10 A

Altro

Tipo di materiale isolante	Termoplastico
Colore	grigio

Altezza	22 mm
Lunghezza	82 mm
Profondità	28,5 mm
Materiale contatto base	CuSn
Materiale contatto superficie	Sn

Montaggio

Nr. Art.	Tipo	Descrizione
25.220.4653.0	Presa PCB 8113 B / 16 TOP OB	
25.220.1653.0	Presa PCB 8113 B / 16 TOP	
01.060.4653.0	Presa PCB 8113 BK / 16 OB	
01.060.1653.0	Presa PCB 8113 BK / 16	
25.320.4653.0	Presa PCB 8113 B / 16 OB	
25.320.1653.0	Presa PCB 8113 B / 16	
25.325.4653.0	Presa PCB 8113 B / 16 VR OB	
25.325.1653.0	Presa PCB 8113 B / 16 VR	
25.326.4653.0	Presa PCB 8113 B / 16 VL OB	
25.326.1653.0	Presa PCB 8113 B / 16 VL	
25.820.4653.0	Presa PCB 8113 BFK /16 TOP OB	
25.820.1653.0	Presa PCB 8113 BFK /16 TOP	

Disegno tecnico

These dimensions will be especially checked at delivery
Only inspection dimensions
With /£ marked dimensions are only valid for internal use

Diese Maße werden bei Abnahme besonders geprüft
Ausschließlich Prüfmaße
Mit /£ gekennzeichnete Maße sind nur für interne Zwecke gültig

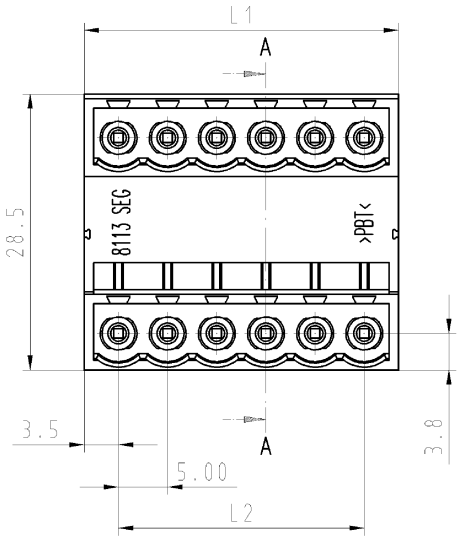

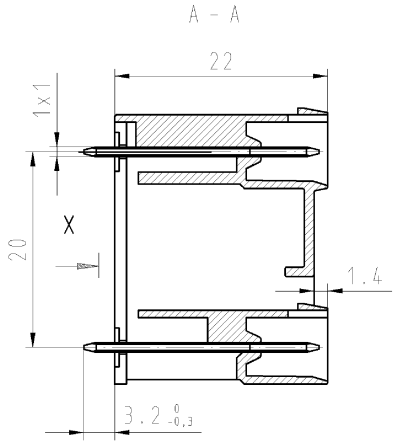

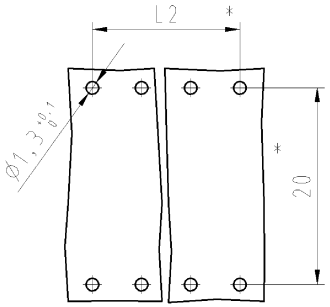

Lochbild/Layout

*) Lochbildtoleranz nach IEC 326 T3, sehr fein/
drill hole tolerances acc. to DIN IEC 326 part 3 very fine

gezeichnet/drawn:
27.334.0653.0

Technische Daten
Technical Data

		VDE	UL	CSA
Bemessungsspannung rated voltage	V	250	300	300
Bemessungsstrom rated current	A	10	10	10
Brennbarkeitsklasse UL 94 V-0 flamability rating UL 94 V-0				
Verschmutzungsgrad 3/Überspannungskategorie III pollution degree 3/overvoltage category III				

Kontaktbasismaterial contact basis material	CuSn4 F47
Diffusionssperre diffusion barrier	Cu 2-3µm
Kontaktoberfläche contact surface	Sn 4-6µm
Isoliermaterial insulating material	PBT

Teile-Nr. part no.	Typ type	Polzahl pole	L1	L2
27.334.0253.0	8113 SEG / 2 / 4 G OB	4	12	5
27.334.0353.0	8113 SEG / 3 / 6 G OB	6	17	10
27.334.0453.0	8113 SEG / 4 / 8 G OB	8	22	15
27.334.0553.0	8113 SEG / 5 / 10 G OB	10	27	20
27.334.0653.0	8113 SEG / 6 / 12 G OB	12	32	25
27.334.0753.0	8113 SEG / 7 / 14 G OB	14	37	30
27.334.0853.0	8113 SEG / 8 / 16 G OB	16	42	35
27.334.0953.0	8113 SEG / 9 / 18 G OB	18	47	40
27.334.1053.0	8113 SEG / 10 / 20 G OB	20	52	45
27.334.1153.0	8113 SEG / 11 / 22 G OB	22	57	50
27.334.1253.0	8113 SEG / 12 / 24 G OB	24	62	55
27.334.1353.0	8113 SEG / 13 / 26 G OB	26	67	60
27.334.1453.0	8113 SEG / 14 / 28 G OB	28	72	65
27.334.1553.0	8113 SEG / 15 / 30 G OB	30	77	70
27.334.1653.0	8113 SEG / 16 / 32 G OB	32	82	75
27.334.1753.0	8113 SEG / 17 / 34 G OB	34	87	80
27.334.1853.0	8113 SEG / 18 / 36 G OB	36	92	85
27.334.1953.0	8113 SEG / 19 / 38 G OB	38	97	90
27.334.2053.0	8113 SEG / 20 / 40 G OB	40	102	95
27.334.2153.0	8113 SEG / 21 / 42 G OB	42	107	100
27.334.2253.0	8113 SEG / 22 / 44 G OB	44	112	105
27.334.2353.0	8113 SEG / 23 / 46 G OB	46	117	110
27.334.2453.0	8113 SEG / 24 / 48 G OB	48	122	115

Weitere Daten siehe Katalog
further data see catalog

Tolerierung nach DIN 7167/Tolerance system acc. to DIN 7167.
(This DIN-Standard desbribes the envelope principle. According to the envelope principle the deviations of form and parallelism are limited by the size tolerances).

ja/yes ☒ Stoffverbots- und Deklarationsliste nach UU-TGM-05/03 ist einzuhalten.
Conformity with Wieland document UU-TGM-05/03 (list of prohibited / declarable hazardous substances) to be declared!

Freitoleranz nach
General tolerance

CAD - Zeichnung, keine manuellen Änderungen
CAD - drawing, no manual modifications allowed

1.Verwendung: -
First Use:

Blatt: 1 von 1
Sheet: 1 of 1

	/	Werkstoff/Material	2002	Tag/Date	Name	Zeichnung Nr./Drawing No.
	/	Farbe: grau, ähnl. RAL 7032	gezeichnet/drawn	30.04.	Bauer F.	T 27.334.0253.0 01K a
	/	colour: grey:,sim. to RAL7032	geprüft/checked	-	-	
	/	Maßstab/Scale 2:1	Normgep./Stand. check	-	-	Maße in mm/Dimensions are in mm
	/	Vol. mm³ Off./Surf. mm²	Ersatz für/Replacement for: -			
	/					
a	04.05.2006/	wieland Elektrische Verbindungen	Type 8113 SEG /./. G OB		Benennung/Title LP_STIFTLEISTE Rastermaß 5,00 PCB-Header pitch 5,00mm	
Index	Datum / Blatt Date / Sheet					
Änderung/Revision						

Index a

Weitergabe sowie Vervielfältigung dieses Dokumentes, Verwertung und Mitteilung seines Inhalts sind verboten, soweit nicht ausdrücklich gestattet.
The reproduction, distribution and utilization of this document as well as the communication of its contents to others without express authorization is prohibited.

OU-PEM-08/91

27334025300K_4 CADW1044 Schmitt 2006-05-04T11:45:40 1:000