product data sheet

item no. 96.032.4A55.7

connector RST20I3S S1 ZR5SH GN02

RST® CLASSIC connector, straight, number of poles 3, male, connection type screw connection, rated voltage 250 V / 400 V, rated current 20 A, cable diameter 8 - 12 mm, color of coding/ contact carrier leaves green



item no.	96.032.4A55.7
EAN	4049088539206
order unit	100 piece(s)

certificates / approvals

technical data

note

note	RST® terminals with screw clamping allow the connection of conductors without special preparation (without ferrules) according to EN 60999-1.

general

rated current	20 A
rated voltage	250 V / 400 V
rated impulse voltage	4 kV
strain relief	yes
pollution degree	3
lockable	self-locking (unlocking by tool)
color of coding/ contact carrier	leaves green
Pole codification	1, 2, PE
color of housing inclusive strain relief	black
RAL-Nummer Codierung/Kontakteinsatz	6002

connection data

cable diameter max.	12 mm
cable diameter min.	8 mm
connection cross section solid mm² max.	6 mm²
connection cross section solid mm² min.	0.75 mm²
connection cross section fine stranded mm² max.	6 mm²
connection cross section fine stranded mm² min.	0.75 mm²
terminations per pole	1
connection cross section stranded mm² min.	0.75 mm²
connection cross section stranded mm² max.	6 mm²
sheath strip length	26.5 mm
wire strip length	8 mm

model

model	male
connection type	screw connection

degree of protection (IP)	IP66/68 (3m;2h) /IP69

material

housing material	polyamide
halogen free	yes
contact material	CuZn
fire load	0.272 kWh/St
insulation components continous temperature	100 °C
surface finish	silver-plated

dimensions

length	79.1 mm
width	34.6 mm
height	34.6 mm

accessories

item no.	type	description
05.564.4453.1	cover for male connector SW	RST20i3/2 cover piece, for covering unused male connectors, color black
99.416.6205.2	cover for male connector SW	RST20i3/2 cover piece, for covering unused male connectors, with fastening belt, color black

assembly

item no.	type	description
96.031.5055.7	device connector RST20I3S B1 M01 H GN0	RST® CLASSIC device connector, standard, straight, M25, number of poles 3, model female, connection type screw connection, rated voltage 250 V / 400 V, rated current 20 A, color of coding/ contact carrier leaves green
96.031.4A55.7	connector RST20I3S B1 ZR5SH GN02	RST® CLASSIC connector, straight, number of poles 3, female, connection type screw connection, rated voltage 250 V / 400 V, rated current 20 A, cable diameter 8 - 12 mm, color of coding/ contact carrier leaves green

technical drawing

Weitergabe sowie Vervielfältigung dieses Dokuments, Verwertung und Mitteilung seines Inhalts sind verboten, soweit nicht ausdrücklich gestattet.
The reproduction, distribution and utilization of this document as well as the communication of its contents to others without express authorization is prohibited.

These dimensions will be especially checked at delivery
Only inspection dimensions
With /E marked dimensions are only valid for internal use

Diese Maße werden bei Abnahme besonders geprüft
Ausschließlich Prüfmaße
Mit /E gekennzeichnete Maße sind nur für interne Zwecke gültig

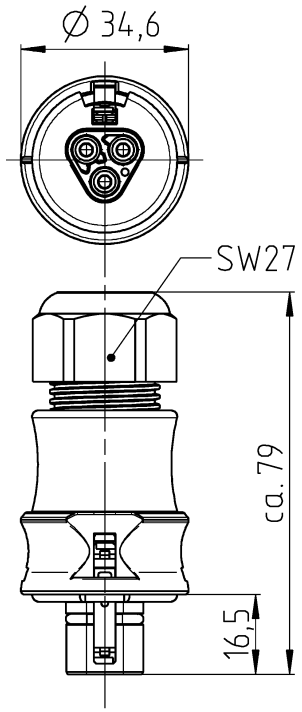

Auslieferungszustand/delivery status

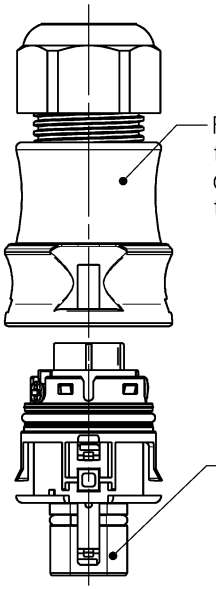

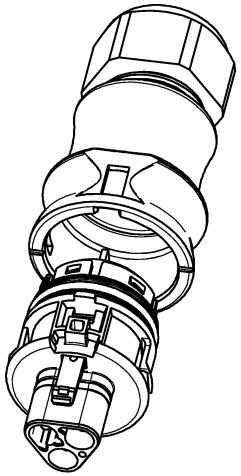

Verpackungseinheit: 100 Stück
packaging unit: per 100

96.032.4A55.7	RST2013S S1 ZR5S H GN02	grün/green
Bestellnummer /order number	Typ /type	Farbe /color

Weitere Daten siehe KATALOG oder eKATALOG.
Additional data see CATALOG or eCATALOG.

www.wieland-electric.com
eshop.wieland-electric.com

Tolerierung Size ISO 14405 Ⓔ / Tolerance system Size ISO 14405 Ⓔ.
(This ISO-standard describes the envelope principle. According to the envelope principle the deviations of form and parallelism are limited by the size tolerances).

ja/yes ☒ Stoffverbots- und Deklarationsliste nach WN 5020.010 ist einzuhalten. Conformity with Wieland document WN 5020.010 e (list of prohibited / declarable hazardous substances) to be declared!

Freitoleranz nach General tolerance

CAD - Zeichnung, keine manuellen Änderungen
CAD - drawing, no manual modifications allowed

1. Verwendung: First Use:

Blatt: 1 von 1
Sheet: 1 of 1

Werkstoff / Material

Maßstab / Scale: 1:1

Vol. mm³ Oft./Srf. mm²

	Tag/Date	Name
gezeichnet drawn	18.02.2019	Duetsch T .
geprüft checked		
Normgeor. Stand. check		

Zeichnung Nr. / Drawing No.: 96.032.4A55.7 13K

Index: -

Maße in mm / Dimensions are in mm

Ersatz für / Replacement for:

Index | Datum / Blatt Date / Sheet | Änderung / Revision

wieland
www.wieland-electric.com

Type: RST2013S
S1 ZR5S H GN02

Bennenung/Title:
STECKERTEIL+ZE
Schraubanschluss ohne Drahtschutz für 400V
screw connection for 400V