wieland

wipos

wipos PSU3 Power supplies

Technical specification

Dok.-Nr. BA001382

Stand: 07/2025 (Rev. A)

INFO

Copyright

This document is copyright-protected. The rights derived from this copyright are reserved for Wieland Electric. Reproduction of this document or parts of this document is only permissable within the limits of the statutory provision of the Copyright Act. Any modification or abridgment of the document is prohibited without the express agreement of Wieland Electric.

Any other product or trade names listed in this manual are trademarks of the respective owners.

Subject to change

Subject to technical changes for reasons of continued development.

Industries & Applications

Automation | Industrial | Renewable | Comms | Test | EVO

ePLAN data portal

Features & Benefits

- **Wide 3 phase input range** for various AC power systems
- **Wide DC input range** for various DC power systems
- **Parallel mode switch** to activate load balancing behaviour
- **Two means of transient protection** increase process stability
- **Fast OVP control** protects sensitive loads
- **Very low inrush energy peak (I^2t)** saves cost for input line protection
- **Push-in terminals available** to serve individual application needs
- **High efficiency and low stand-by losses contribute to an** eco-friendly energy footprint
- **DC-OK and inhibit relay contacts** for professional integration into applications control architecture
- **Comprehensive boost power capabilities** support start-up into capacitive loads and increase system design flexibility
- Designed to meet the most accepted IEC safety standards
- Exceeds regulatory EMC standards on radiated emission (Class B), surge immunity and fast transients

Technical data abstract[1]

Output voltage	*nom.*	24VDC
Adjustment range	*nom.*	22.5 .. 29VDC
Output current	*nom.*	5A
Boost current 1[4]	*max.*	6A / continuous
Boost current 2[4]	*max.*	7.5A / 600s
Overload behaviour		CC + Intermittent mode (Hiccup)
Hold-up time[2]	*min.*	20 / 40ms
Frequency range	*max.*	47 .. 63Hz
AC input voltage	*nom.*	3x400 .. 500VAC
AC input voltage range	*max.*	3x350 .. 575VAC
DC input voltage	*nom.*	530 .. 675VDC
DC input voltage	*max.*	450 .. 810VDC
Inrush current[2]	*typ.*	25 / 30A
Inrush energy[2]	*typ.*	0.3 / 0.6A²s
Output power	*nom.*	120W
Boost power 1[4]	*max.*	144W / continuous
Boost power 2[4]	*max.*	180W / 600s
Power factor	*typ.*	0.5
Conversion efficiency[2]	*typ.*	91.3 / 91.2%
Power losses[2]	*typ.*	11.4 / 11.6W
No-load consumption	*max.*	1.7 / 2.1W
Ambient operating temperature	*max.* *nom.*	-25 .. +70°C (-13 .. +158°F) -25 .. +55°C (-13 .. +131°F)
Service lifetime[2]	*min.*	184 000 / 162 000hrs
Service life MTBF[3]	*min.*	5.7M / 1.8M hrs
Width		55mm (2 11/64in)
Height		129mm (5 5/64in)
Depth		138.2mm (5 7/16in)
Weight		660g (1.46lb)

[1] All values refer to STC unless otherwise stated | [2] 400 / 500VAC | [3] 50% / 100% P_{out_nom} |
[4] See duty cycle 1/2 under „4. Performance“ on page 11

Certifications & Approvals

IECEE CB SCHEME
IEC EN 61010-1
IEC EN 61010-2-201
IEC EN 62368-1 (Ed.2)

c UL us IND.CONT.EQ
UL CSA 61010-1
UL CSA 61010-2-201
E169904

c UL us
UL CSA 62368-1 (Ed.2)
E197597

Compliance & Registration

CE
EU Low Voltage Dir. 2014/35/EU
EU EMC Dir. 2014/30/EU
EU RoHS Dir. 2011/65/EU

UK CA
Safety and EMC Reg. 2016
Hazard. Substances Reg. 2012

China RoHS Law SJ/T 11363-2006

Commercial information

Order codes	wipos PSU3 24-5 P
HS code	85044095
Life-cycle status	Launch
Product revision	D06
Single package	
Width	70mm ($2^{3}/_{4}$in)
Height	180mm ($7^{3}/_{32}$in)
Depth	166mm ($6^{17}/_{32}$in)
Gross weight	780g (1.72lb)
Bulk package	
Width	340mm ($13^{25}/_{64}$in)
Height	205mm ($8^{5}/_{64}$in)
Depth	405mm ($15^{15}/_{16}$in)
Quantity	10 units
Pallet	
Width	1000mm ($39^{3}/_{8}$in)
Length	1200mm ($47^{1}/_{4}$in)
Quantity	240 units
Manufacturer warranty	2 years

Model selector

Model name	Output Power	Output Voltage	Feature
WIPOS PSU3 24-5 P	120W	24VDC	Push-in terminals
WIPOS PSU3 24-10 P	240W	24VDC	Push-in terminals
WIPOS PSU3 24-20 P	480W	24VDC	Push-in terminals
WIPOS PSU3 24-40 P	960W	24VDC	Push-in terminals
WIPOS PSU3 48-5 P	240W	48VDC	Push-in terminals
WIPOS PSU3 48-10 P	480W	48VDC	Push-in terminals
WIPOS PSU3 48-20 P	960W	48VDC	Push-in terminals

wipos UPS

Uninterruptible DC power supply

DC Input: 10 .. 60VDC
DC Output: 10 .. 58VDC
Output Power: 960W
Battery Input: 10 .. 58VDC
Programmable with wipos PLAN Software

wipos UPS 960-20 P
with Display and keys as human interface & programming

wipos UPS 960-20 ECO
without Display and keys, programming only by USB-Interface & wipos PLAN Software

wipos UPS

wipos PSW

Wide range power supply

Input voltage range 1phase, 2phase, 3phase: 187 .. 550VAC

wipos PSW 24-5
Output voltage: 23 .. 28VDC
Output current nom.: 5A

wipos PSW 24-10
Output voltage: 23 .. 28VDC
Output current nom.: 10A

wipos PSW 24-20
Output voltage: 23 .. 28VDC
Output current nom.: 20A

wipos PSW 48-10
Output voltage: 45 .. 55VDC
Output current nom.: 10A

wipos PWS

Contents

1. General ... 8
1.1 Proper handling of the product ... 8
1.2 Protection enclosure required ... 8
1.3 Humid environments ... 8
1.4 Switch or circuit-breaker mounting position ... 8
1.5 Observe country-specific regulations ... 8
1.6 Prohibited electrical/mechanical modifications ... 8
1.7 Expiry of the manufacturer's warranty ... 8
1.8 Use of third-party products ... 8
1.9 Standard test conditions ... 8
1.10 Description of user elements ... 8
2. Electrical output ... 9
3. Electrical input ... 10
4. Performance ... 11
5. Ambient conditions ... 12
6. Reliability and Service lifetime ... 14
7. Dimensions & Mechanical data ... 14
8. Installation clearances ... 15
9. Wiring & Connection ... 16
10. Signaling & Control ... 16
11. Block diagram ... 17
12. Device protection ... 18
13. Electrical Safety ... 18
13.1 Overvoltage category design ... 18
13.2 Insulation strength ... 19
13.3 HIPOT test ... 19
14. Electromagnetic immunity ... 20
15. Electromagnetic emission ... 20
16. Certifications & Approvals ... 21
17. Designed to meet ... 21
18. Compliance & Registration ... 21
19. Typical use-cases ... 22
19.1 Parallel Operation ... 22
19.2 Series operation ... 23
19.3 Two-phase operation ... 24

List of abbreviations

avg.	*average*	The arithmetic average calculated from a row of values.
CC		Constant output current
CGD		Corner grounded delta (AC power system)
chap.		Chapter
Dir.		Directive
eCap		Electrolytic capacitor
EMC		Electromagnetic Compatibility
Iac		AC input current under a particular operating condition
Iout		DC output current under a particular operating condition
Iout_boost		Available current reserve beyond Iout_nom (w/o a drop in Uset) that can be delivered for a limited time.
Iout_nom		Continuous nominal DC output current under STC.
Iout_ol		Max. intermittent DC output current in an overload situation and a shortfall of Uset.
Iout_sc		Max. short circuit DC output current and Uout close to zero.
ITU		International Telecommunication Union
max.	*maximum*	The maximum value which a parameter can assume, or which must not be exceeded.
MCB		Miniature circuit breaker
min.	*minimum*	The minimum value which a parameter can assume, or must not be fallen below.
MTBF		Mean Time Between Failure
nom.	*nominal*	The ideal or reference value of a technical parameter which is guaranteed under STC. All nominal values in this document refer to each other and represent the general specification of the device.
OCP		Overcurrent protection
OTP		Overtemperature protection
OVP		Overvoltage protection
PELV		Protective Extra Low Voltage
Pout		Output power under a particular operating condition with reference to Pout_nom
Pout_boost		Available power reserve beyond Pout_nom that can be delivered for a limited time.
Pout_nom		Nominal output power
PSU		Power supply unit
Reg.		Regulation
SELV		Safety Extra Low Voltage
STC		Standard test conditions (see „1. General“ on page 8)
typ.	*typical*	The typical value of a parameter is not guaranteed but can be assumed under STC. The min. or max. value must be determined during the engineering process of the end application.
Uout		DC output voltage under a particular operating condition
Uout_nom		Nominal DC output voltage
Uset		Manually set output voltage via voltage potentiometer
UVP		Undervoltage protection
Vac		AC input voltage under a particular operating condition
Vac_nom		Nominal AC input voltage
/		Separator between two values. The conditions to which the values refer can be found in the last column of the table.
..		Specifies a range of values.
<		The parameter is less than or equal to the specified value
>		The parameter is greater than or equal to the specified value

Table data structure

X. Technical category			
Technical parameter	Characteristic (optional)	Values	Condition (optional)

Unless otherwise stated, all values are specified in normal mounting position, at full load, nominal input and output voltages, 25°C (77°F) ambient temperature and a run-in time of 5 minutes.

1. General

1.1 Proper handling of the product
The faultless and safe operation of the products requires proper transport, proper storage, set-up, assembly, installation, commissioning, operation and maintenance. The permissible ambient conditions must be observed. Instructions in the associated documentation must be observed.

1.2 Protection enclosure required
The device must be installed in a protective housing or control cabinet to which only qualified personnel have access.

1.3 Humid environments
Do not operate the device in a damp environment or in an environment where condensation is likely to occur.

1.4 Switch or circuit-breaker mounting position
A switch or circuit-breaker must be mounted near the equipment.

1.5 Observe country-specific regulations
In addition to the product documentation, the relevant country-specific regulations for the installation of the device must be observed.

1.6 Prohibited electrical/mechanical modifications
The product must not be modified in any way electrically or mechanically. Modifications can result in fatal injuries and damage to property.

1.7 Expiry of the manufacturer's warranty
The power supply is maintenance-free. Repairs can only be carried out by the manufacturer. Opening the housing voids the manufacturer's warranty.

1.8 Use of third-party products
If third-party products and components are used for power or voltage increase, buffering (AC or DC side), EMC filtering, redundancies or for DC side load protection, it must be in accordance with the Wieland Electric product specification.

1.9 Standard test conditions
Unless otherwise stated, all values are specified in normal mounting position, at full load, nominal input and output voltages, 25°C (131°F) ambient temperature and a run-in time of 5 minutes.

1.10 Description of user elements

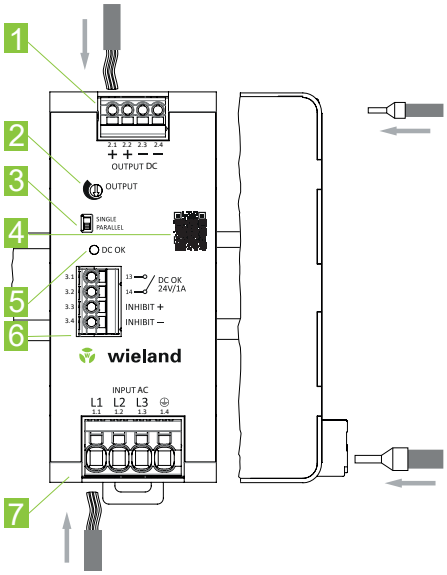

1 Push-in terminal, DC output
2 Single turn potentiometer for adjusting the output voltage
3 Dip-switch for configuration of single or parallel operation.
When changing the operating mode, the mains voltage must be disconnected.
4 Web link to product documentation
5 Green DC-OK status LED
6 Push-in terminal for signal contacts
7 Push-in terminal, AC input

For more detailed information on the input/ouput wiring and the connection of the signalling contacts, please refer to „9. Wiring & Connection“ on page 16.

Fig. 1: Description of user elements

2. Electrical output

Output voltage [Uout_nom]	*nom.*	24V_{DC}	
Adjustment range [Uset]	*nom.*	22.5 .. 29V_{DC}	
Adjustment tolerance	*max.*	±3%	at upper/lower end position of voltage potentiometer
Factory default		24V_{DC} (±0.1%)	
Output current [Iout_nom]	*nom.*	5A	22.5 .. 29V_{DC}
Boost current 1 [Iout_boost1]	*max.*	6A / continuous	280 .. 575V_{AC}, 22.5 .. 29V_{DC}, <55°C_{amb}
Boost current 2 [Iout_boost2]	*max.*	7.5A / 600s	280 .. 575V_{AC}, 24V_{DC}, <55°C_{amb}
Overload behaviour		Constant current + Intermittent mode (Hiccup)	see Fig. 3
SC hiccup current [Iout_hc]	*max.* *avg.*	7.5A / 0.3s 0.75A / 10s	
Short-circuit proof		yes, with auto-recovery	
Instant SC current [Iout_sc]	*max.*	25A / < 1ms	
Start-up delay	*typ.*	2.5s	
Rise time	*typ.* *typ.*	10ms 20ms	0% P_{out_nom} 100% P_{out_nom}, resistive load
Voltage overshoot	*typ.*	1.7V_{DC}	
Fall time	*typ.*	20ms	
Hold-up time	*min.*	20 / 40ms	400 / 500V_{AC}
Output capacitance	*max.*	9 070µF	
Capacitive load start-up	*max.*	5 000µF	22,5 .. 29V_{DC}
Feedback voltage	*max.*	35V_{DC}	
Return current	*max.*	10mA	OFF mode
Line regulation	*max.*	0.06%	350 .. 550V_{AC}
Load regulation	*max.* *max.*	0.6% 3.0%	350 .. 550V_{AC} 350 .. 550V_{AC}, parallel mode
Dynamic response	*typ.*	±250mVpp	350 .. 550V_{AC}, 10..100% P_{out_nom}, transient frequency 10Hz
Ripple & noise voltage*	*max.* *max.*	10mVpp 30mVpp	350 .. 550V_{AC}, +25 .. +70°C_{amb} 350 .. 550V_{AC}, -25 .. +25°C_{amb}

*The measurement was performed with a short twisted pair cable using a 120µF eCap and a 0.1µF cCap connected in parallel. A bandwidth limit of 20MHz is required.

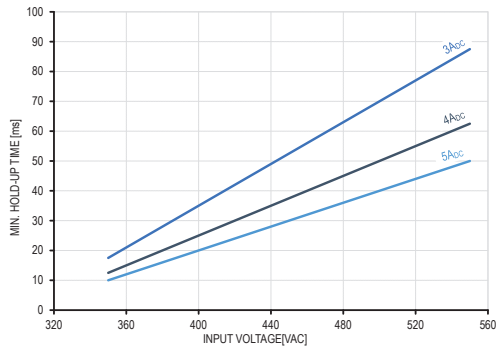

Fig. 2: Hold-up times under different load conditions and in dependence of the input voltage

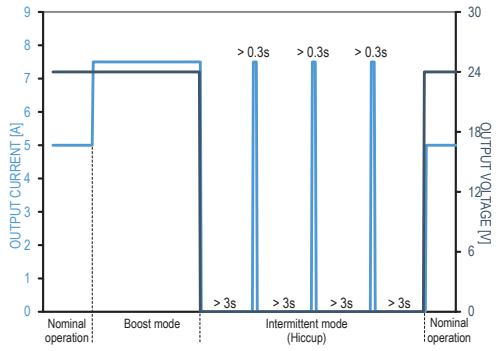

Fig. 3: Output current and voltage in different operation modes

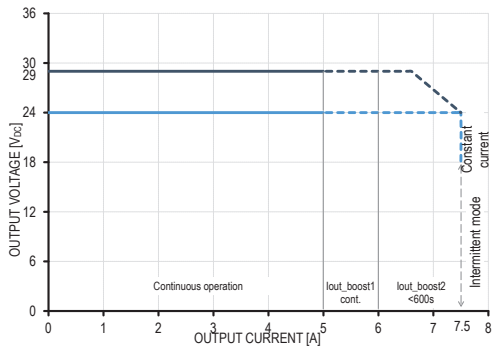

Fig. 4: Overcurrent capability up to 55°C_{amb}

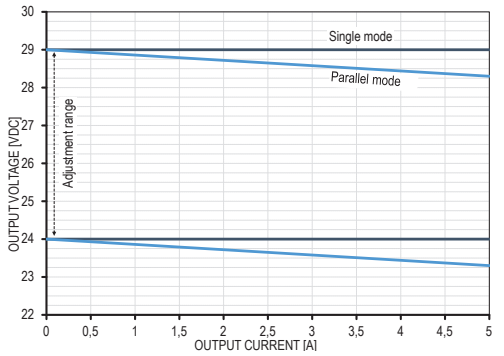

Fig. 5: Voltage drop in parallel mode in dependence of the load current

Unless otherwise stated, all values are specified in normal mounting position, at full load, nominal input and output voltages, 25°C (77°F) ambient temperature and a run-in time of 5 minutes.

3. Electrical input

AC power systems		TN, TT, IT (IEC 61010-1), CGD	
Mains Frequency	*nom.*	50 / 60Hz	
Frequency range	*max.*	47 .. 63Hz	3AC, PE
AC input voltage* [Uin_nom]	*nom.*	3x400 .. 500V_{AC}	
Voltage range	*max.*	3x350 .. 575V_{AC}	
DC Input voltage [Uin_nom]	*nom.*	530 .. 675V_{DC}	
DC Input voltage range	*max.*	450 .. 810V_{DC}	
Turn-ON voltage	*typ.*	310V_{AC}	
Turn-OFF voltage	*typ.*	275V_{AC}	
AC input current	*max.*	3x0.5A	According safety approval reports
AC input current RMS	*typ.*	3x0.36 / 3x0.31A	400 / 500V_{AC}
Crest factor	*typ.*	3.3 / 3.5	400 / 500V_{AC}
Inrush current	*typ.*	25 / 30A <3ms	400 / 500V_{AC}, 25°C_{amb}, cold start
Inrush energy	*typ.*	0.3 / 0.6A²s	400 / 500V_{AC}, 25°C_{amb}, cold start
Input capacitance	*max.*	34µF	

*The product is also capable to operate with DC input voltage. Please contact your local support team (see page 25).

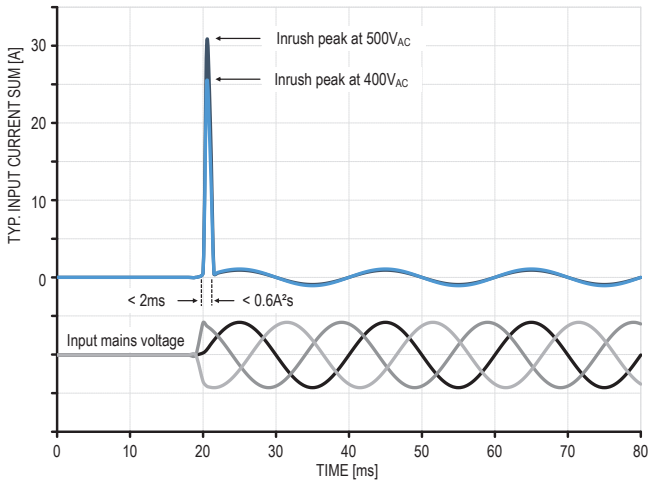

Fig. 6: Inrush current and energy during start-up phase

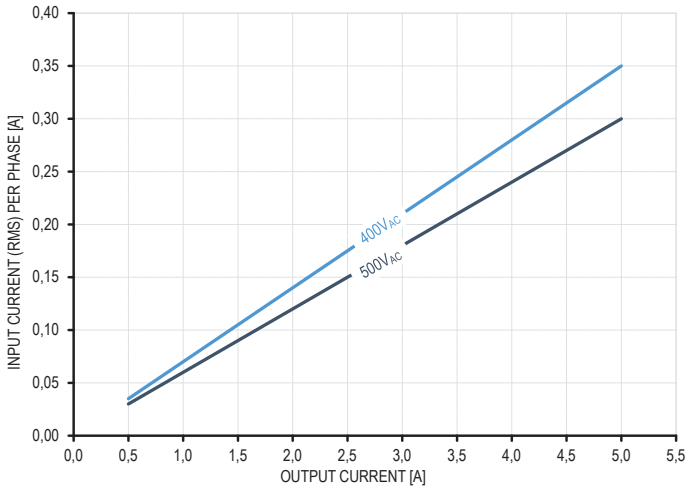

Fig. 7: Typical input current per phase in dependence of the load current

Unless otherwise stated, all values are specified in normal mounting position, at full load, nominal input and output voltages, 25°C (77°F) ambient temperature and a run-in time of 5 minutes.

4. Performance

Output power [Pout_nom]	*nom.*	120W	
Boost power 1 [Pout_boost1]	*max.*	144W / continuous	280 .. 575VAC, 24VDC, <55°Camb
Boost power 2 [Pout_boost2]	*max.*	180W / 600s	280 .. 575VAC, 24VDC, <55°Camb
Duty cycle 1	*max.*	1.00	See boost power 1
Duty cycle 2	*max.*	0.35	See boost power 2
Dropped phase power	*max.*	120W	2x400 .. 500VAC, not compliant with IEC/EN 61000-3-2 harmonic currents
Apparent input power	*typ.*	262.9 / 263VA	400 / 500VAC
Active input power	*typ.*	131.4 / 131.6W	400 / 500VAC
Reactive input power	*typ.*	227.7 / 228Var	400 / 500VAC
Power factor	*typ.*	0.5	
Conversion efficiency	*typ.* *avg.**	91.3 / 91.2% 89.4 / 88.5%	400 / 500VAC, 100% P_{out_nom} 400 / 500VAC, 25 .. 100% P_{out_nom}
Power losses	*typ.* *avg.**	11.4 / 11.6W 13.6 / 15.0W	400 / 500VAC, 100% P_{out_nom} 400 / 500VAC, 25 .. 100% P_{out_nom}
No-load consumption	*max.*	1.7 / 2.1W	400 / 500VAC, 0% P_{out_nom}
Stand-by consumption	*max.*	1.2 / 1.6W	400 / 500VAC, Inhibit status HIGH (see Fig. 23)

*Average efficiency under 25%, 50%, 75% and 100% load conditions, according to eco-design requirements of EU commission regulation 2019/1782.

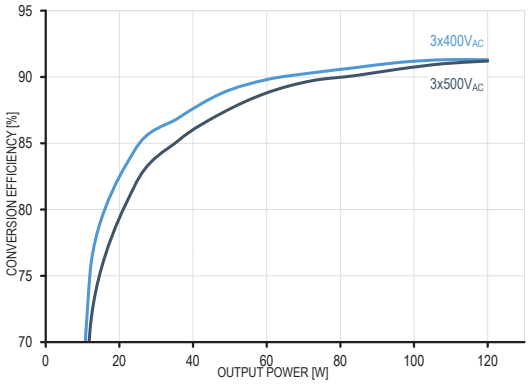

Fig. 8: Conversion efficiency in dependence of the output power

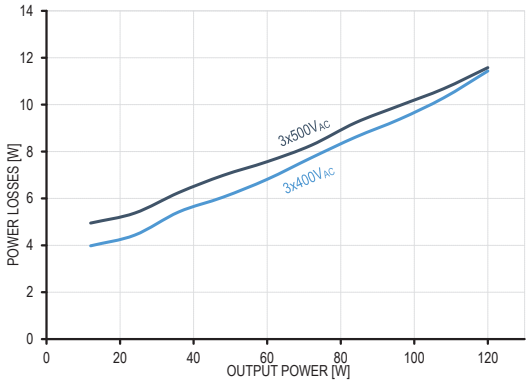

Fig. 9: Power losses in dependence of the output power

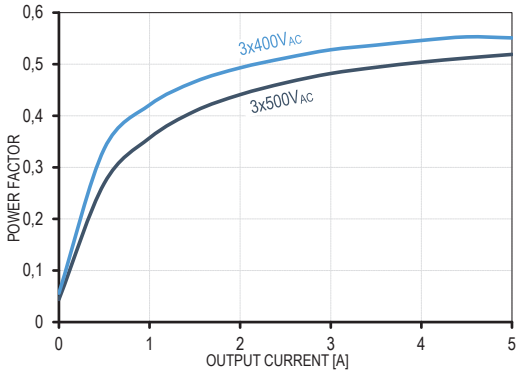

Fig. 10: Input power factor in dependence of the output current

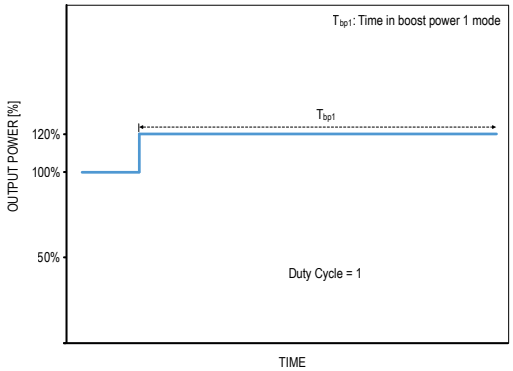

Fig. 11: Period and frequency of use of boost power 1 in normal mounting position

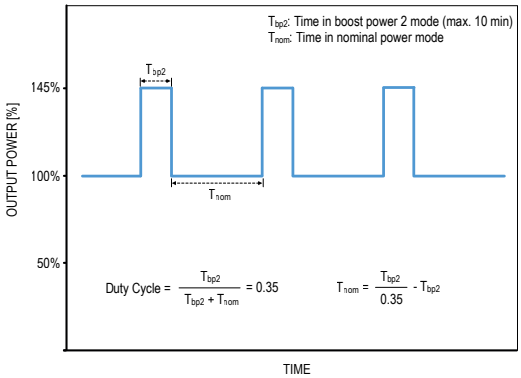

Fig. 12: Period and frequency of use of boost power 2 in normal mounting position

Unless otherwise stated, all values are specified in normal mounting position, at full load, nominal input and output voltages, 25°C (77°F) ambient temperature and a run-in time of 5 minutes.

5. Ambient conditions

Ambient storage temperature	*max.*	-40 .. +85°C_{amb} (-40 .. +185°F_{amb})	
Ambient operating temperature	*max.*	-25 .. +70°C_{amb} (-13 .. +158°F_{amb})	
	nom.	-25 .. +55°C_{amb} (-13 .. +131°F_{amb})	normal mounting position, >55°Camb (>131°Famb)
	nom.	-25 .. +55°C_{amb} (-13 .. +131°F_{amb})	rotated ±90° around X or Y axis
	nom.	-25 .. +55°C_{amb} (-13 .. +131°F_{amb})	rotated 180°
Power derating*	*min.*	0.8W/°C_{amb} (0.44W/°F_{amb})	normal mounting position, >55°C_{amb} (>131°F_{amb})
	min.	3.4W/°C_{amb} (1.89W/°F_{amb})	rotated ±90° around X or Y axis, >45°C_{amb} (>113°F_{amb})
	min.	3.4W/°C_{amb} (1.89W/°F_{amb})	rotated 180°, >45°C_{amb} (>113°F_{amb})
Cooling concept		Natural convection	
Relative storage humidity IEC 60068-2-30	*max.*	95%	non-condensing
Relative operation humidity IEC 60068-2-30	*max.*	95%	non-condensing
Operating altitude	*nom.*	3000mASL (9842ftASL)	
	max.	6000mASL (19685ftASL)	not UL approved, reduced OVC
Percental power derating	*min.*	5% per 1000m (5% per 3281ft)	>3000mASL (>9842ftASL)
Temperature derating	*min.*	5°C per 1000m (9°F per 3281ft)	>3000mASL (>9842ftASL)
Atmospheric pressure	*nom.*	689hPa	
	max.	469 .. 1070hPa	
Pollution degree IEC 60664-1, IEC 62477-1		2	
Vibration sinusoidal IEC 60068-2-6		2g / 10 .. 500Hz, 1 hour/direction X,Y,Z	non-operating, mounted on DIN rail
Shock test sinosoidal halfwave IEC 60068-2-27		30g / 11ms ±5ms, 3 bumps/direction, 9 bumps total	non-operating, mounted on DIN rail
Audible noise		Some audible noise may be heard during no load, overload or short circuit.	

*Not actively controlled

For altitudes above 3000mASL (9842ftASL) the next lower OVC must be considered.

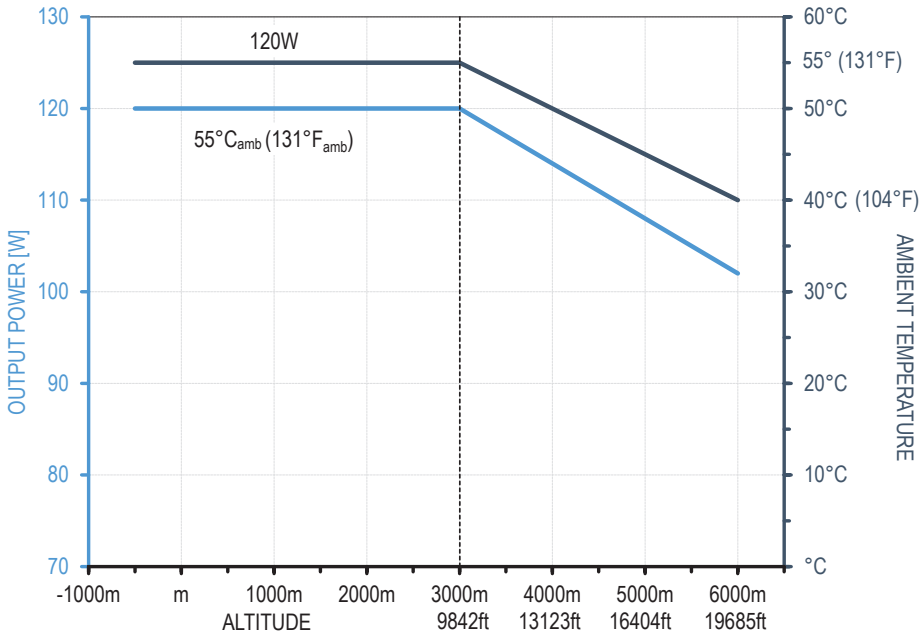

Fig. 13: Output power and ambient temperature derating at increasing altitudes

Unless otherwise stated, all values are specified in normal mounting position, at full load, nominal input and output voltages, 25°C (77°F) ambient temperature and a run-in time of 5 minutes.

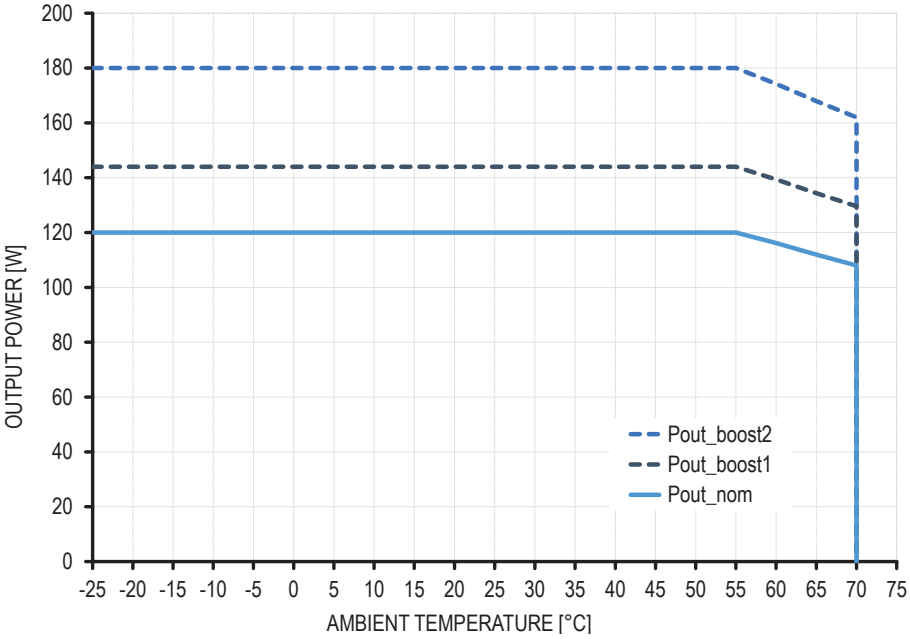

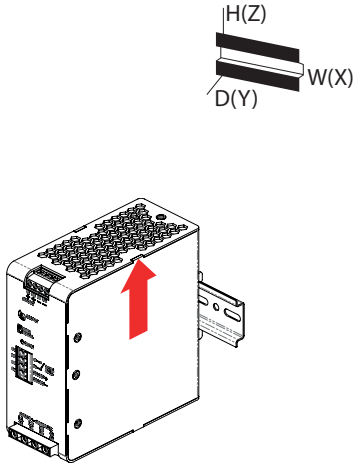

Fig. 14: Available output power in dependence of the ambient temperature for normal mounting position

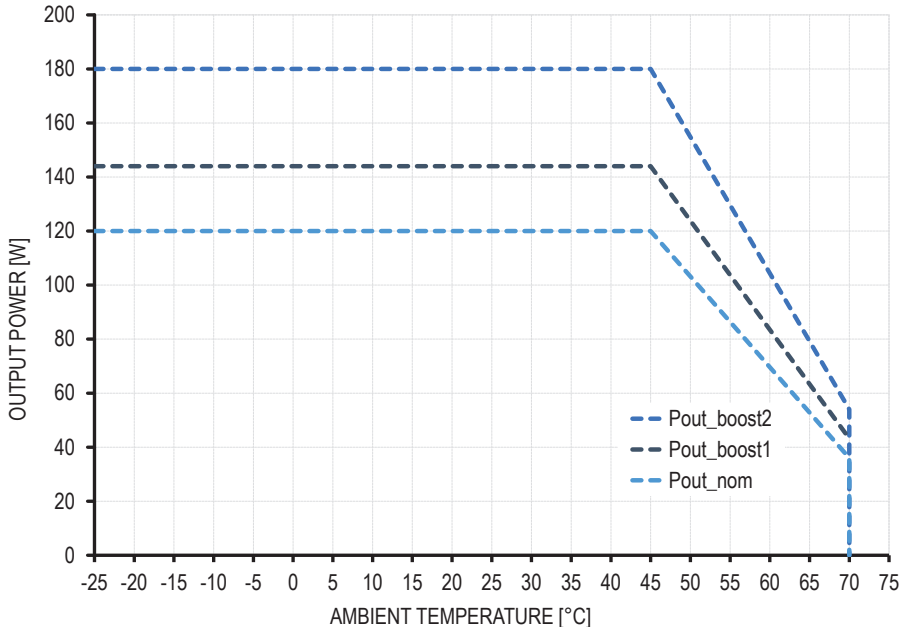

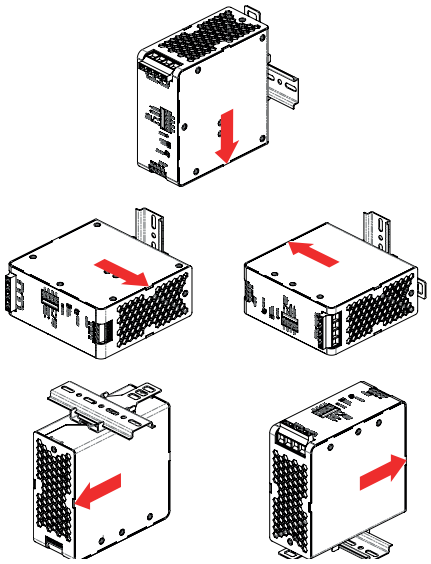

Fig. 15: Available output power in dependence of the ambient temperature for rotated mounting positions

Unless otherwise stated, all values are specified in normal mounting position, at full load, nominal input and output voltages, 25°C (77°F) ambient temperature and a run-in time of 5 minutes.

6. Reliability and Service lifetime

Service lifetime	*min.*	121 000 / 91 000hrs	400 / 500VAC, 100% P_{out_nom}, 40°C_{amb}, 24/7
	min.	184 000 / 162 000hrs	400 / 500VAC, 75% P_{out_nom}, 40°C_{amb}, 24/7
	min.	343 000 / 258 000hrs	400 / 500VAC, 100% P_{out_nom}, 25°C_{amb}, 24/7
Early life MTBF	*min.*	1.1M / 1.0M / 0.8M hrs	25 / 40 / 55°C_{amb}, 50% P_{out_nom}
Telcordia SR-332 Issue 4	*min.*	0.79M / 0.65M / 0.55M hrs	25 / 40 / 55°C_{amb}, 100% P_{out_nom}
Service life MTBF	*min.*	5.7M / 4.0M / 2.2M hrs	25 / 40 / 55°C_{amb}, 50% P_{out_nom}
Telcordia SR-332 Issue 4	*min.*	1.8M / 1.4M / 0.9M hrs	25 / 40 / 55°C_{amb}, 100% P_{out_nom}

The maximum service lifetime guaranteed by the eCap manufacturer is 131 400hrs (15 years). All values above are theoretically calculated.

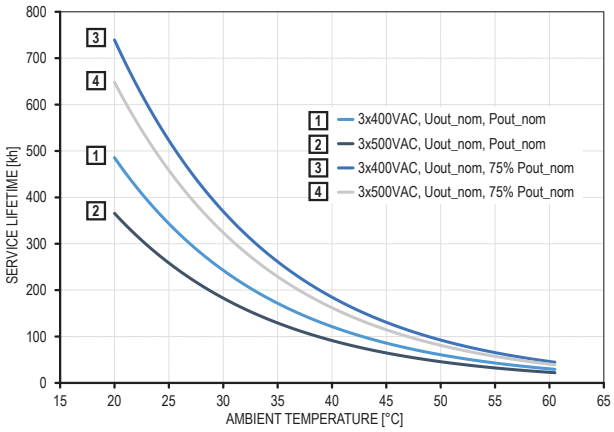

Fig. 16: Power supply service lifetime in dependence of ambient temperature

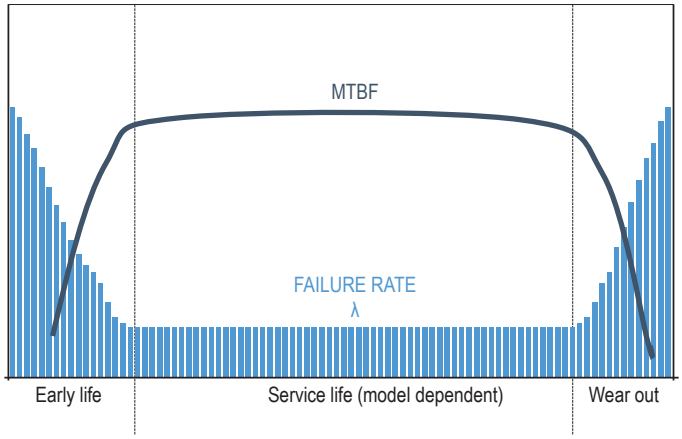

Fig. 17: Generic diagram visualising failure rate and MTBF values during the products life-cycle

7. Dimensions & Mechanical data

Enclosure material		Aluminum	
Cover material		Aluminum	
Inflammability class UL 94		V0	incl. connection terminals
Width		55.0mm ($2^{11}/_{64}$in)	
Height		129.0mm ($5^{5}/_{64}$in)	
Depth			w/o DIN rail
Push-in terminal model (-A1)		138.2mm ($5^{7}/_{16}$in)	
Weight		660g (1.46lb)	
Lever arm	*max.*	62mm ($2^{7}/_{16}$in)	into the direction of Y axis
Torsional moment on DIN rail	*max.*	0.4Nm (3.55lb in)	into the direction of Z axis
Enclosure openings	*max.*	7mm ($^{9}/_{32}$in)	
DIN rail types IEC 60715		TH 35-7.5, TH 35-15	

Unless otherwise stated, all values are specified in normal mounting position, at full load, nominal input and output voltages, 25°C (77°F) ambient temperature and a run-in time of 5 minutes.

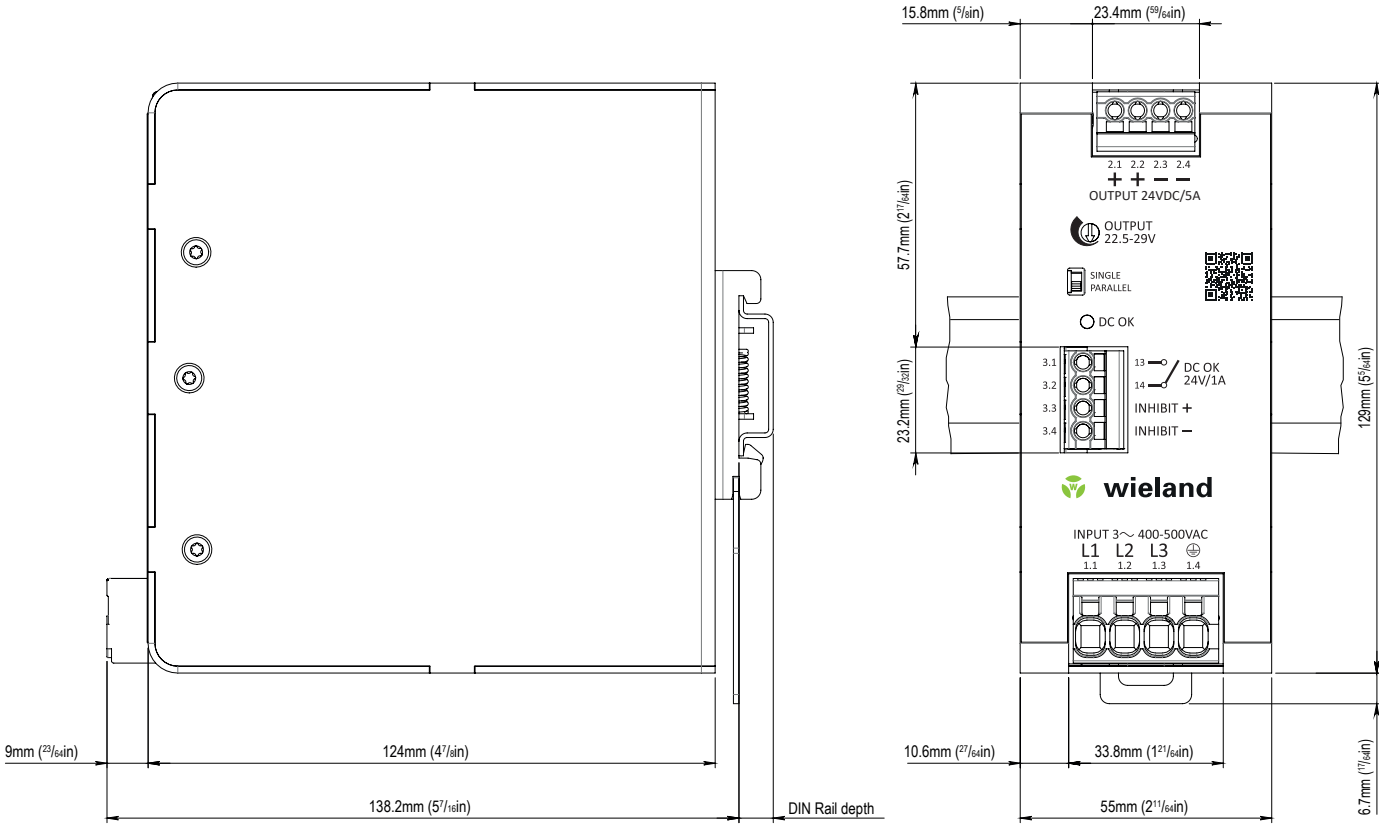

Fig. 18: Dimension drawing of wipos PSU3 24-5 P

8. Installation clearances

Vertically (Z axis)				
Top side	1	*min.*	40mm (1 37/64in)	
Bottom side	2	*min.*	20mm (25/32in)	installation above heat sources not permitted
Horizontally (X axis)				
Left side / Right side	3a 4a	*min.*	5mm (13/64in)	to heat sources (same power rating)
Left side / Right side	3b 4b	*min.*	2mm (5/64in)	to passive components

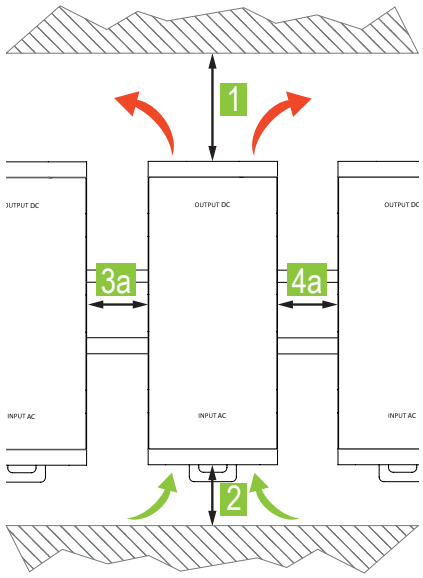

Fig. 19: Installation clearances to heat sources

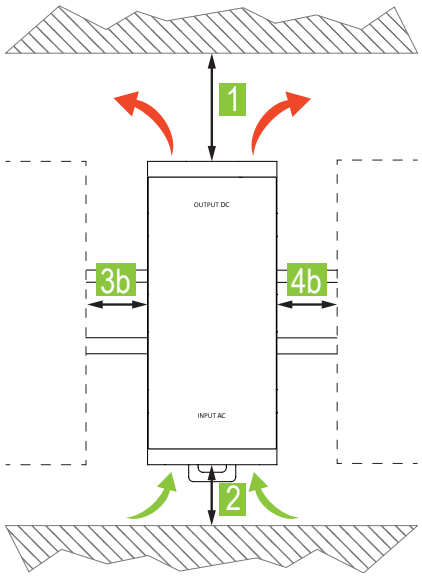

Fig. 20: Installation clearances to passive components

Unless otherwise stated, all values are specified in normal mounting position, at full load, nominal input and output voltages, 25°C (77°F) ambient temperature and a run-in time of 5 minutes.

9. Wiring & Connection

wipos PSU3 24-5 P	Input	Output	Signaling
Terminal type	Push-in	Push-in	Push-in
Recommended screw driver	SL 0.6x3.5mm (SL $^{1}/_{32}$ x $^{9}/_{64}$in)	SL 0.5x3.0mm (SL $^{1}/_{64}$ x $^{1}/_{8}$in)	SL 0.5x3.0mm (SL $^{1}/_{64}$ x $^{1}/_{8}$in)
Solid wire	0.2-10.0mm² (24-8AWG)	0.2-2.5mm² (26-12AWG)	0.2-2.5mm² (26-12AWG)
Flexible wire	0.2-6.0mm² (24-8AWG)	0.2-2.5mm² (26-12AWG)	0.2-2.5mm² (26-12AWG)
Standard ferrules*	0.25-4.0mm²	0.2-1.5mm²	0.2-1.5mm²
Uninsulated ferrules*	0.25-6.0mm²	0.2-2.5mm²	0.2-2.5mm²
Stripping length	15mm ($^{19}/_{32}$in)	9-10mm ($^{23}/_{64}$ - $^{25}/_{64}$in)	9-10mm ($^{23}/_{64}$ - $^{25}/_{64}$in)

*The ferrules must be selected to match the stripping length.

In compliance to IEC/EN/UL 62368-1 (Ed.2) ferrules are required if flexible wires are used. In compliance with IEC/EN/UL 61010-1, 61010-2-201 appropriate copper wires must be used that withstand operating temperatures of at least 75°C (167°F) in ambients NOT exceeding 40°C (104°F), and 90°C (194°F) in ambients exceeding 40°C (104°F).

10. Signaling & Control

DC OK

Type		Relay contact	
Characteristic		N/O	
Closing		U_{out} > 95% U_{set}	duration min. 100ms
Opening		U_{out} < 85% U_{set}	duration min. 100ms
Resistive load	*nom.*	1A	24V_{DC}
	max.	0.5A	60V_{DC}
Trigger hysteresis	*typ.*	0.6V	

Remote ON/OFF

Type		Electrical contact	
Characteristic		Inhibit	
ON threshold	*max.*	3V	
OFF threshold	*min.*	4.5V	
Restart delay	*max.*	6s	
Input voltage	*max.*	30V	
Input current	*max.*	10mA	
Reference potential		Isolated	
Parallel connection		yes	
Active discharging		no	OFF mode

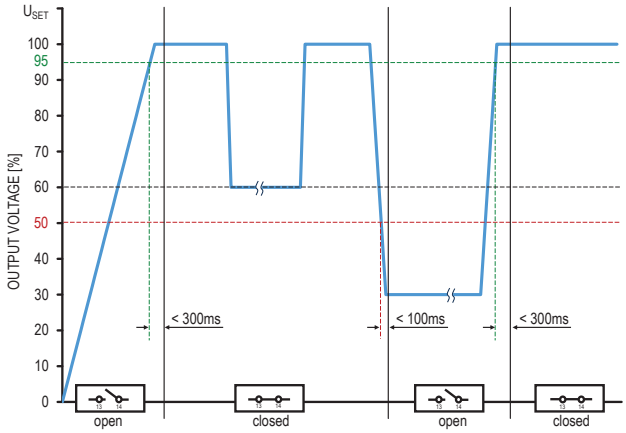

Fig. 21: DC-OK relay status in dependence of output voltage changes

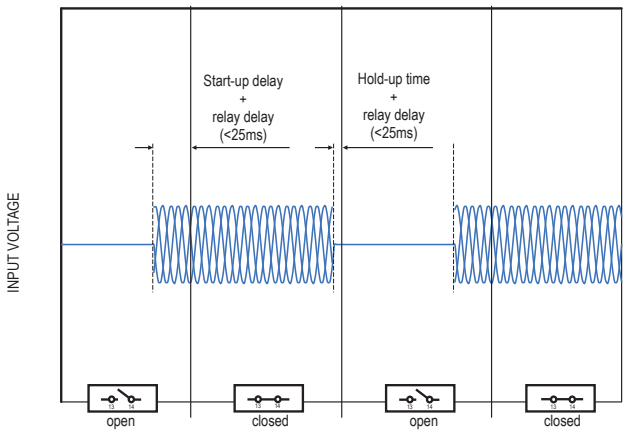

Fig. 22: DC-OK relay status in dependence of AC mains connection

Unless otherwise stated, all values are specified in normal mounting position, at full load, nominal input and output voltages, 25°C (77°F) ambient temperature and a run-in time of 5 minutes.

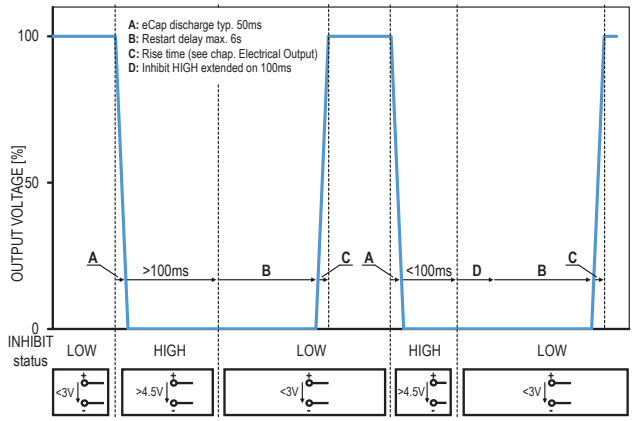

Fig. 23: Control of the output voltage in dependence of the inhibit relay status.

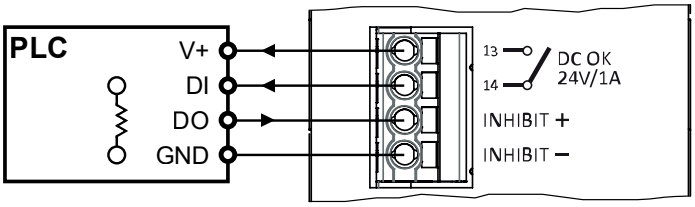

Fig. 24: Generic connection diagram of DC OK and INHIBIT contacts

11. Block diagram

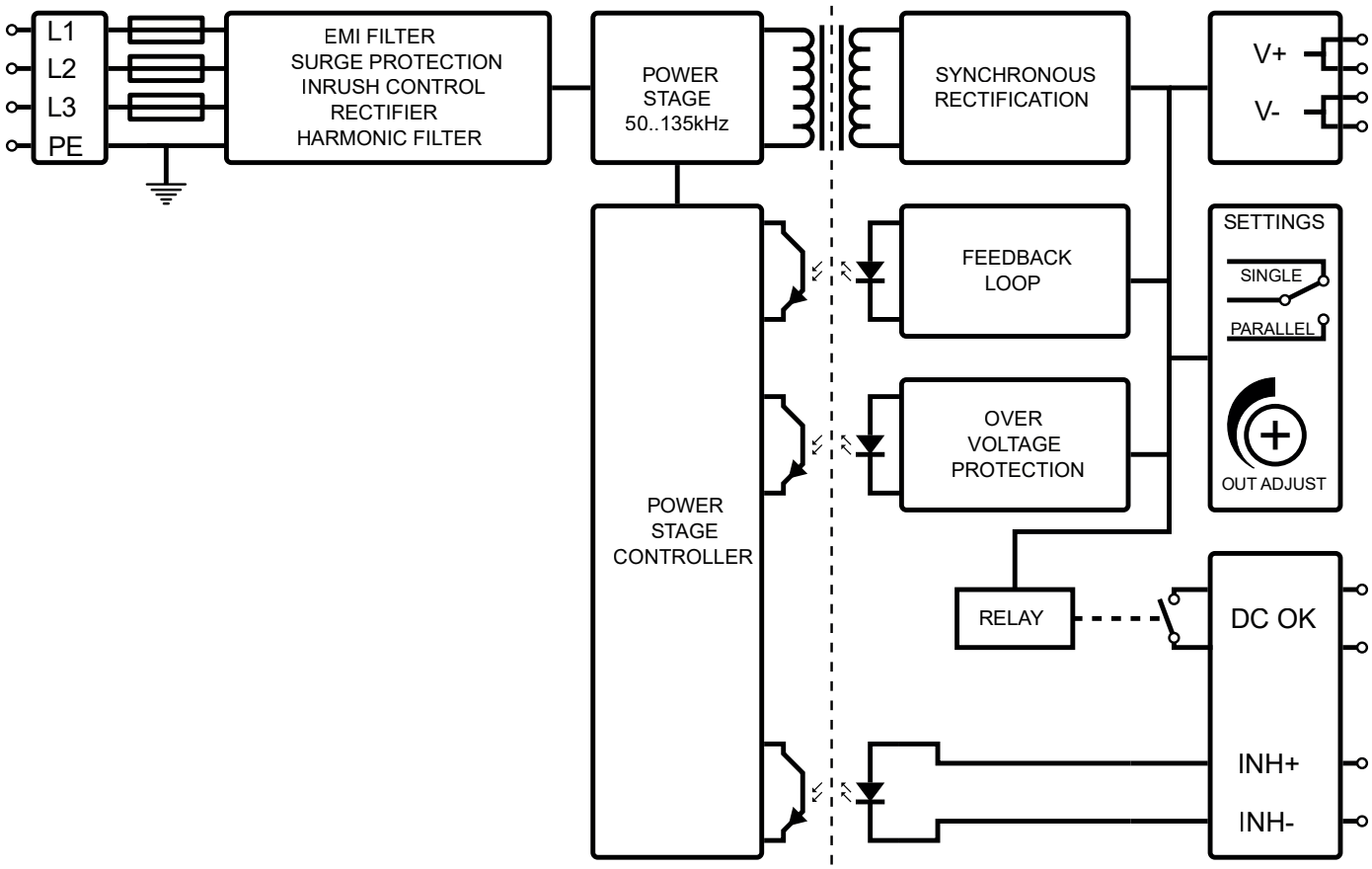

Switching frequencies are depending on U_{in}, U_{out} and I_{out}.

Unless otherwise stated, all values are specified in normal mounting position, at full load, nominal input and output voltages, 25°C (77°F) ambient temperature and a run-in time of 5 minutes.

12. Device protection

Ingress protection degree IEC 60529		IP 20	
NEMA classification NEMA 250-2018		NEMA 1	
Output overtemperature protection (OTP)		Yes, with auto-recovery	
Output overvoltage protection (OVP)	*max.*	32.7V_{DC}, with auto-recovery	
Undervoltage protection threshold (UVP)	*max.*	270V_{AC}	
Output overcurrent protection (OCP)	*min.*	134%, with auto-recovery	
Integrated input fuse		3x T3.15A at L pins	not DC capable, not user replaceable
Recommended MCB types IEC 60898-1, UL 1077		B or C characteristic, 6/8/10A	
Transient protection 1st level 2nd level		 MOV (Metal Oxide Varistor) GDT (Gas Discharge Tube)	

When installed in an end-product, the maximum branch circuit rating must not exceed 20A (IEC/UL 62368-1 Ed.2). If the upstream supply provides a higher ampacity than 20A, an external protection device is required.

13. Electrical Safety

Class of protection IEC 61140		I	PE connection required
Electrical energy source classification IEC 62368-1		ES1	
Safety Extra Low Voltage IEC 61010-2-201, IEC 60950-1		SELV	
Protective Extra Low Voltage IEC 60204-1		PELV	Output must be earthed in the end application
Protective ground resistance	*max.*	100mΩ	
Ground leakage current IEC 60990	*max.* *max.*	0.9mA 1.0mA	TN/TT mains, 3x575V_{AC}, 50Hz TN/TT mains, 3x575V_{AC}, 60Hz
Touch current IEC 60990	*max.* *max.*	40µA 50µA	TN/TT mains, 3x575V_{AC}, 50Hz TN/TT mains, 3x575V_{AC}, 60Hz
Overvoltage category IEC 61010-1, IEC 62368-1 (Ed.2)		II	<3000mASL (<9842ftASL)

13.1 Overvoltage category design

Underlying IEC standard	61010-1	62368-1[1)]	60950-1	61558-2-16[2)]	62477-1	61204-7	60664-1
Mains transient voltage	II	II	II	III	III	III	III
Creepage & Clearance	III	II	III	II	III	III	III

[1)] Edition 2

[2)] not applicable along with IEC 61204-7

Unless otherwise stated, all values are specified in normal mounting position, at full load, nominal input and output voltages, 25°C (77°F) ambient temperature and a run-in time of 5 minutes.

13.2 Insulation strength

		Type test (60s) IEC 61010-1	Routine test (3s) IEC 61010-1	Field test (3s)
Input / Output	A	3510VAC	3510VAC	3510VAC
Input / PE	B	2210VAC	2210VAC	2210VAC
Input / DC OK	C	3510VAC		3510VAC
Input / INHIBIT	D	3510VAC		3510VAC
Output / PE	E	1390VAC	1390VAC	1390VAC
Output / DC OK	F	1390VAC		1390VAC
Output / INHIBIT	G	1390VAC		1390VAC
DC OK / INHIBIT	H	1390VAC		1390VAC

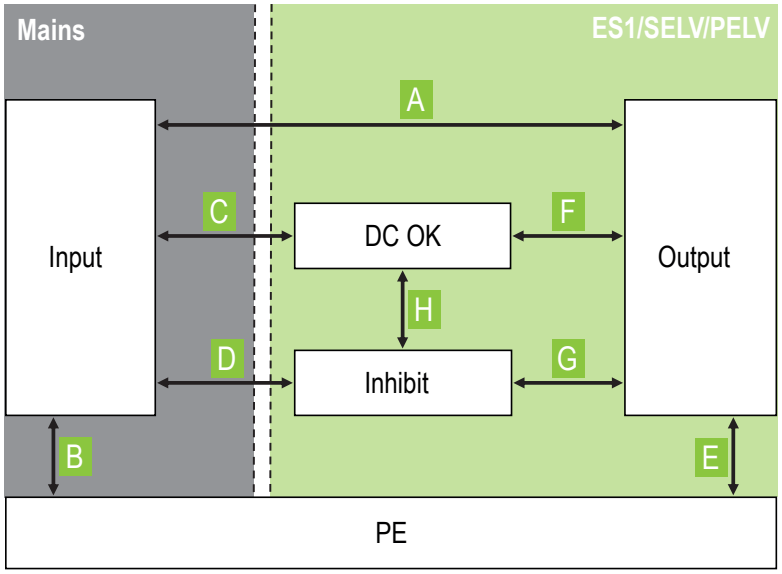

Fig. 25: Schematic of the insulation paths

13.3 HIPOT test

Apart from routine and type test, the end user might need to check the insulation strength during the final inspection and testing to guarantee the electrical safety of the end application. Therefore, a high-voltage test (HIPOT test) can be performed in the field. The following conditions must be observed:

- As every HIPOT test causes stress on the power supplies safety insulation, avoid frequent HIPOT testing or excessive test voltages
- The test voltages and durations, as indicated under „13.2 Insulation strength“ on page 19, must not be exceeded
- The test voltages rise and fall time should be between 2 and 4 seconds
- For the HIPOT test of the insulation path (B) between Input and PE, the gas discharge tube (GDT) must be disconnected

Disconnection of the GDT:

1) Completely remove the connection screw (marked with an arrow) with a Torx X10. (see Fig. 26)
2) Keep the screw in a safe place.
3) After completion of testing, reconnect the GDT only with the original screw to avoid risk of electrical shock or damage.
4) Fasten the screw with a Torx X10 not exceeding a tightening torque of 0.7 Nm.

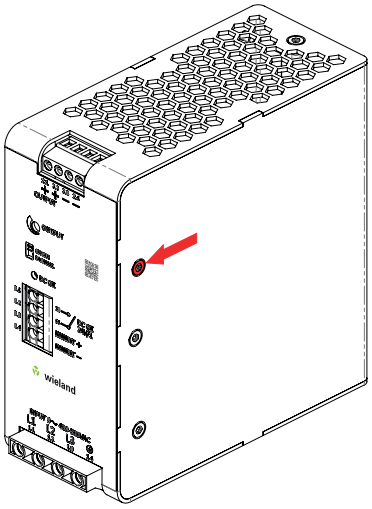

Fig. 26: Position of the connection screw for the GDT

According to EN 60204-1 (Safety of machinery - Electrical equipment of machines), an individual HIPOT test of the power supply isn’t required. During the HIPOT test of the end application, the power supply can be disconnected and only installed once the test has been completed.

Unless otherwise stated, all values are specified in normal mounting position, at full load, nominal input and output voltages, 25°C (77°F) ambient temperature and a run-in time of 5 minutes.

14. Electromagnetic immunity

Investigated under generic standards IEC/EN 61000-6-2 (2019) - Immunity for industrial environments.

Electrostatic contact discharge IEC/EN 61000-4-2	4kV	Criterion A	330Ω / 150pF
Electrostatic air discharge IEC/EN 61000-4-2	8kV	Criterion A	330Ω / 150pF
Electromagnetic RF field[1)] IEC/EN 61000-4-3	10V/m 3V/m 1V/m	Criterion A Criterion A Criterion A	80MHz .. 1GHz 1.4GHz .. 2GHz 2GHz .. 2.7GHz
Fast transients (burst) IEC/EN 61000-4-4			
Input[2)]	4kV	Criterion A	5kHz
Output	2kV	Criterion A	5kHz
Signal contact[2)]	2kV	Criterion A	5kHz
Surge voltages IEC/EN 61000-4-5			
Input symmetrical (L-L)[2)]	2kV	Criterion A	2Ω+18µF, for Φ = 0°,90°,180°,270°
Input asymmetrical (L-PE)[2)]	4kV	Criterion A	12Ω+9µF, for Φ = 0°,90°,180°,270°
Output symmetrical (L-L)	0.5kV	Criterion A	2Ω+18µF
Output asymmetrical (L-PE)	1kV	Criterion A	12Ω+9µF
Signal line asymmetrical (Signal-PE)	1kV	Criterion A	42Ω+0.5µF
Conducted disturbances Input, signal line, PE[3)] IEC/EN 61000-4-6	10V	Criterion A	150kHz .. 80MHz
Power frequency magnetic field IEC/EN 61000-4-8	30A/m	Criterion A	50Hz, 60s each axis (x, y, z)
Voltage dips/sags and interruptions			
IEC/EN 61000-4-11, 61000-4-34	500ms 200ms 20ms 5000ms	Criterion A Criterion A Criterion A Criterion C	400VAC at 70%, 50Hz 400VAC at 40%, 50Hz 400VAC at 0%, 50Hz 400VAC at 0%, 50Hz
SEMI F47-0706	1000ms 500ms 200ms 20ms	Criterion A Criterion A Criterion A Criterion A	400VAC at 80%, 50Hz 400VAC at 70%, 50Hz 400VAC at 50%, 50Hz 400VAC at 0%, 50Hz

[1] Except for the ITU broadcast frequency bands 87 .. 107MHz, 174 .. 230MHz and 470 .. 790MHz, where the level shall be 3V/m.

[2] Exceeds the requirements of the European Low Voltage Directive 2014/35/EU

[3] Except for the ITU broadcast frequency bands 47 .. 68MHz, where the level shall be 3V.

Performance level definitions:

Criterion A:
The device continues operation as intended during and after the test. The specified performance level accepts a change of ±10% on nominal output voltage and current. There is neither a violation of the performance level, nor a loss of function if the device is used as intended.
Criterion B:
The device continues operation as intended after the test. The specified performance level accepts a change of ±10% on nominal output voltage and current. There is neither a violation of the performance level, nor a loss of function if the device is used as intended. During the test a violation of the performance level is allowed.
Criterion C:
A temporary loss of function is allowed, provided the function is auto-recoverable, or can be restored by the operation of the controls.

15. Electromagnetic emission

Investigated under generic standards IEC/EN 61000-6-3 (2007) + A1 (2011) / AC (2012) - Emission standard for residential, commercial and light-industrial environments.

Conducted noise emission input EN 55011, CISPR 11	Class B	150kHz .. 30MHz
Radiated noise emission input EN 55011, CISPR 11	Class B	30MHz .. 1GHz
Harmonic currents input IEC/EN 61000-3-2	Class A	0kHz .. 2kHz
Total harmonic distortion (THD) input IEC/EN 61000-3-2	155% per phase	Order 1..40
Voltage changes, voltage fluctuations and flicker input IEC/EN 61000-3-3	PASS	50Hz

Unless otherwise stated, all values are specified in normal mounting position, at full load, nominal input and output voltages, 25°C (77°F) ambient temperature and a run-in time of 5 minutes.

16. Certifications & Approvals

c UL us IND.CONT.EQ	UL 61010-1 CAN/CSA-C22.2 No. 61010-1	Safety requirements for electrical equipment for measurement, control, and laboratory use - Part 1: General requirements
	UL 61010-2-201 CAN/CSA-C22.2 No. 61010-2-201	Safety requirements for electrical equipment for measurement, control, and laboratory use - Part 2-201: Particular requirements for control equipment UL file: E169904
IECEE CB SCHEME	IEC EN 61010-1	Safety requirements for electrical equipment for measurement, control, and laboratory use - Part 1: General requirements
	IEC EN 61010-2-201	Safety requirements for electrical equipment for measurement, control, and laboratory use - Part 2-201: Particular requirements for control equipment
	IEC EN 62368-1 (Ed.2)	Audio/video, information and communication technology equipment - Part 1: Safety requirements
c RU us	UL 62368-1 (Ed. 2)	Audio/video, information and communication technology equipment - Part 1: Safety requirements UL file: E197597

17. Designed to meet

The safety design of the product complies additionally with the following harmonised standards.

IEC 60950-1	Information technology equipment - Safety - Part 1: General requirements
IEC/EN 62477-1	Safety requirements for power electronic converter systems and equipment - Part 1: General
IEC/EN 61204-7	Low-voltage switch mode power supplies - Part 7: Safety requirements
IEC/EN 61558-2-16	Safety of transformers, reactors, power supply units and similar products for supply voltages up to 1100 V - Part 2-16: Particular requirements and tests for switch mode power supply units and transformers for switch mode power supply units
EN 60204-1	Safety of machinery - Electrical equipment of machines - Part 1: General requirements

18. Compliance & Registration

CE	Conformity with health, safety, and environmental protection standards for products sold within the European Economic Area (EEA).
UK CA	UKCA (UK Conformity Assessed) is the product marking that is used for certain goods being placed on the United Kingdom market.
	The Waste Electrical and Electronic Equipment Directive (WEEE Directive) is the European Community Directive 2012/19/EU on collection, recycling and recovery targets for all types of electrical goods.
RoHS COMPLIANT	The Restriction of Hazardous Substances Directive 2011/65/EU (RoHS 2) regulates the use of certain hazardous substances in electrical and electronic equipment.
ALL COMPONENTS REACH COMPLIANT Registration, Evaluation and Authorisation of Chemicals	Registration, Evaluation, Authorisation and Restriction of Chemicals (REACH) is a European Union regulation that addresses the production and use of chemical substances, and their potential impacts on both human health and the environment.

Unless otherwise stated, all values are specified in normal mounting position, at full load, nominal input and output voltages, 25°C (77°F) ambient temperature and a run-in time of 5 minutes.

19.1 Parallel Operation

For the purpose of power increase, power supplies can be paralleled. Furthermore, a paralleling can be done for limited redundancy purposes in order to backup malfunctions occurring on the primary (AC) side of the power supplies. The following measures must be taken into account:

- Only power supplies of the same series and power rating must be paralleled
- The dip switch on the front side of the power supplies must be switched to PARALLEL
- Load wiring shall be identical in terms of length and cross section
- The output voltage of the power supplies shall be adjusted to the same value (±100mV)
- All paralleled power supplies must be operated under the same ambient conditions
- The power supplies must not be operated under any condition which requires a power derating (e.g. altitudes above 3000mASL (9842ftASL), temperatures above 55°C_{amb} (131°F_{amb}), mounting orientations others than the normal mounting position, etc.)
- If more than three power supplies are paralleled, each output must be protected by a decoupling module (e.g. Wieland Electric wipos PSU3 series), MCB, diode, or fuse
- The increased installation clearances must be considered (see „8. Installation clearances“ on page 15)

In parallel operations the values of output load regulation, inrush currents, EMI, harmonic and leakage currents will increase.

When changing the operating mode between SINGLE and PARALLEL, the mains voltage must be disconnected.

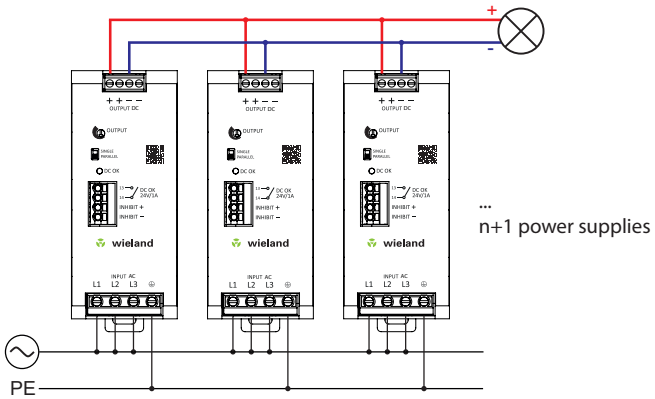

Fig. 27: Connection scheme of n+1 power supplies paralleled for the purpose of power increase

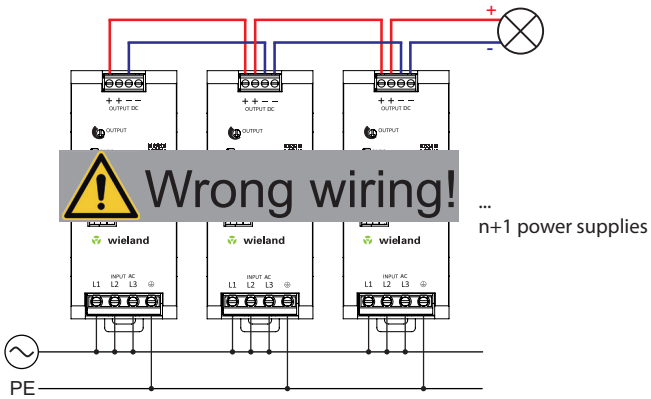

Fig. 28: Example of a wrong connection scheme

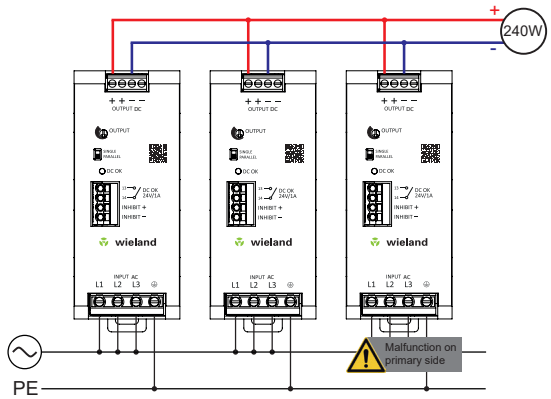

Fig. 29: Connection scheme of n+1 power supplies paralleled for the purpose of a 240W limited redundancy

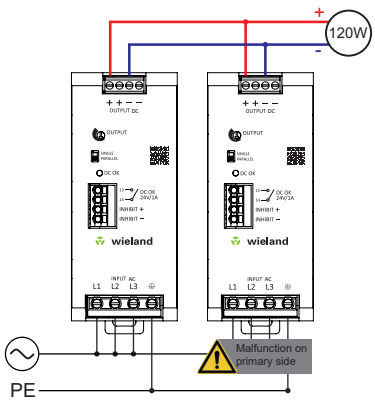

Fig. 30: Connection scheme of 1+1 power supplies paralleled for the purpose of a 120W limited redundancy

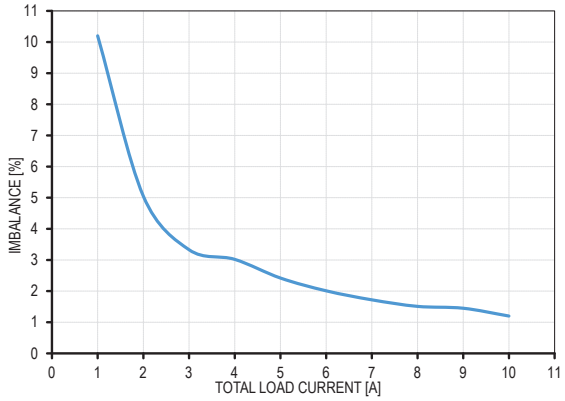

Fig. 31: Typical load sharing behaviour of two power supplies in parallel mode

19.2 Series operation

For the purpose of higher load voltages, power supplies can be connected in series. The following measures must be taken into account:

- The output voltage sum must not exceed 250V_{DC}
- If the output voltage sum exceeds 60V_{DC}, a safeguard against unintended touching must be considered
- Only power supplies of the same series and power rating must be connected in series
- The dip switch on the front side of the power supplies must be switched to SINGLE
- All power supplies in series must be operated under the same ambient conditions
- The power supplies must not be operated under any condition which requires a power derating (e.g. altitudes above 3000mASL (9842ftASL) , temperatures above 55°C_{amb} (131°F_{amb}), mounting orientations others than the normal mounting position, etc.)
- The increased installation clearances must be considered (see „8. Installation clearances“)

In series operations the values of output load regulation, inrush currents, EMI, harmonic and leakage currents will increase.

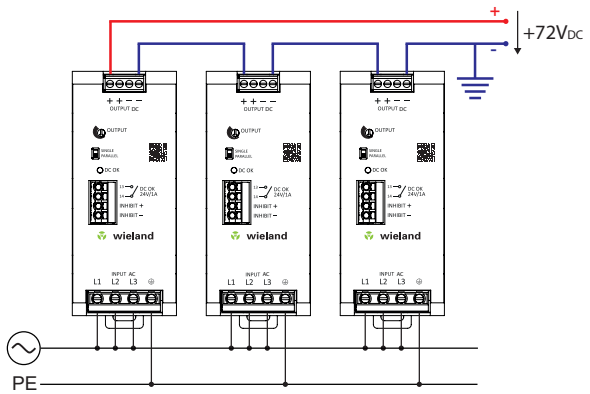

Fig. 32: Connection scheme for series operation with positive voltage level

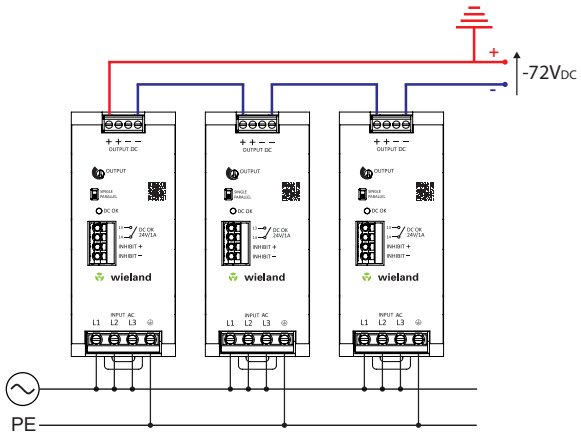

Fig. 33: Connection scheme for series operation with negative voltage level

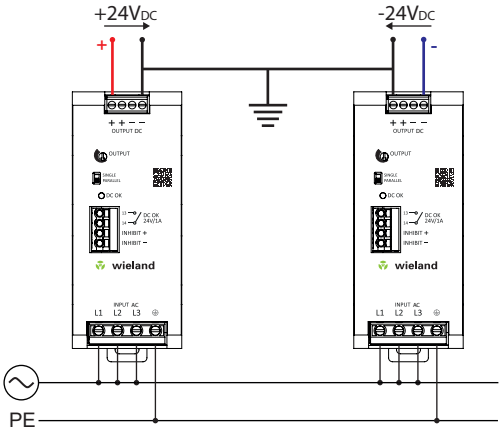

Fig. 34: Connection scheme for series operation with centre tap

19.3 Two-phase operation

The device is capable to run continuously on two phases of a 3-phase power grid. A power derating under nominal conditions is not required. All conditions associated with a power derating must be carefully considered.
Please note if running on two phases:

- Power losses will increase and can no longer be guaranteed as specified for 3-phase operation
- Hold-up times as specified for 3-phase operation can no longer be guaranteed
- The device will go into OTP mode if operating permanently at input voltages below 350V_{AC}
- The device is no more compliant with IEC/EN 61000-3-2 harmonic current limits
- Safety approvals under UL 61010-1, -2-201 and UL 62368-1 (Ed.2) are no more applicable

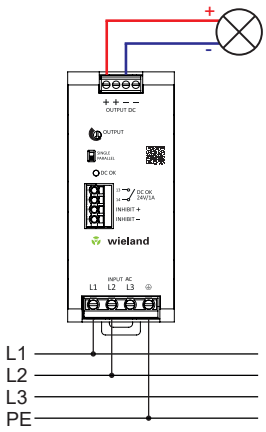

Fig. 35: Connection diagram for 2-phase operation

Unless otherwise stated, all values are specified in normal mounting position, at full load, nominal input and output voltages, 25°C (77°F) ambient temperature and a run-in time of 5 minutes.

wieland

Wieland Electric GmbH
Brennerstraße 10 – 14
96052 Bamberg · Germany

Fon: +49 951 9324-0
Fax: +49 951 9324-198
info@wieland-electric.com
www.wieland-electric.com