product data sheet

item no. 55.503.1053.0

feed-through terminal WKM 2,5 / 15/V0

Feed-through terminal with Screw connection for mounting on TS 15 , nominal cross section: 2.5 mm², width: 5 mm, color: grey



item no.	55.503.1053.0
EAN	4015573210257
order unit	100 piece(s)

certificates / approvals

CAN-Ex ATEX USA-Ex

technical data

general

nominal cross section	2.5 mm²
color	grey
number of levels	1
number of clamp positions per level	2
width/grid dimension	5 mm
insulating housing	PA666
inflammability class of insulation material acc. with UL94	V0
explosion-tested version "Ex e"	yes
mounting method	DIN rail (top hat rail) 15 mm
terminal blocks for electrical installations	yes
Anzahl der Klemmstellen je Etage	2
Montageart	DIN rail (top hat rail) 15 mm
Brennbarkeitsklasse des Isolierstoffs	V0
Reihenklemmen für Installationsverteiler	yes

technical data

rated current	25 A
rated voltage	500 V
rated impulse voltage	6 kV
pollution degree	3
closing plate required	yes
type of insulation material	thermoplastic
length	32 mm

connection data

connection type 1	screw connection

connection type 2	screw connection
minimum cross section solid	0.5 mm²
maximum cross section solid	4 mm²
minimum cross section fine stranded	0.5 mm²
maximum cross section fine stranded	2.5 mm²
wire strip length	9 mm
torque conductor mounting	0.4 Nm

technical data UL/CSA

cross section UL	22-14 AWG
voltage UL	300 V
current factory wiring	10 A
current field wiring	10 A
cross section CSA	22-12 AWG
voltage CSA	600 V
current CSA	25 A

accessories

item no.	type	description
Z7.215.4227.0	jumper bar VB WKM 2,5 / 15 - 2	Cross connector for DIN rail terminal blocks type WKM 2.5, 2 -pole
Z7.215.4327.0	jumper bar VB WKM 2,5 / 15 - 3	Cross connector for DIN rail terminal blocks type WKM 2.5, 3 -pole
Z7.215.4427.0	jumper bar VB WKM 2,5 / 15 - 4	Cross connector for DIN rail terminal blocks type WKM 2.5, 4 -pole
Z7.215.4527.0	jumper bar VB WKM 2,5 / 15 - 5	Cross connector for DIN rail terminal blocks type WKM 2.5, 5 -pole
Z7.215.4627.0	jumper bar VB WKM 2,5 / 15 - 6	Cross connector for DIN rail terminal blocks type WKM 2.5, 6 -pole
98.090.0015.0	mounting rail TS 15 PERF - l:2000mm	Mounting rail TS 15, slotted, Höhe 5,5 mm, length 2 m, material steel. galv. zinc-plated and passivated
07.311.0853.0	end plate APM 2,5 - 4 / 15	End plate for DIN rail terminal blocks type WKM 2,5… und WKM 4..., color: grey
07.311.0853.6	end plate APM 2,5 - 4 / 15 BLAU	End plate for DIN rail terminal blocks type WKM 2,5… und WKM 4..., color: blue
07.311.1853.0	partition TWM 2,5 - 4 /15	Partition for DIN rail terminal blocks type WKM 2,5… and WKM 4..., color: grey
07.311.1853.6	partition TW 2,5 - 4 /15 BLAU	Partition for DIN rail terminal blocks type WK ..., color blue
04.242.5053.0	marking tag strips 9705 A / 5 / 10	Marking tag strips for DIN rail terminal blocks type 9700 A / 5…, 10 tags per strip, color: white, unmarked, markable with Wieplot plotter- system

technical drawing

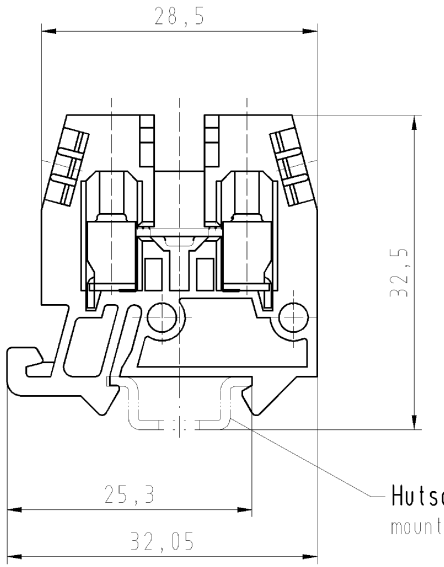

Hutschiene EN 60715-15x5,5
mountail-rail EN 60715-15x5,5

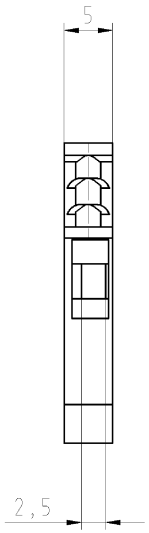

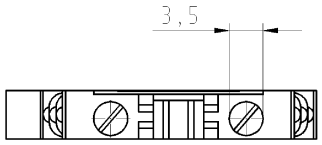

Teile-Nr./part-nr.	Farbe/colour	Typ/type
55.503.1053.0	grau/grey	WKM 2,5/15/V0
55.503.1053.1	schwarz/black	WKM 2,5/15 SW/V0
55.503.1053.2	weiß/white	WKM 2,5/15 WEIß/V0
55.503.1053.4	braun/brown	WKM 2,5/15 BRAUN/V2
55.503.1053.5	rot/red	WKM 2,5/15 ROT/V0
55.503.1053.6	blau/blue	WKM 2,5/15 BLAU/V0
55.503.1053.7	grün/green	WKM 2,5/15 GRÜN/V0
55.503.1053.8	gelb/yellow	WKM 2,5/15 GELB/V0
55.503.1053.9	orange/orange	WKM 2,5/15 ORANGE/V0

Weitere Daten siehe Katalog
further data see catalog

Freitoleranz nach DIN			CAD - Zeichnung, keine manuellen Änderungen			1.Verwendung: -		Bl.: 1 von 1
		Maßstab 2:1		2003	Tag	Name	T	Zeichnung Nr. 55.503.1053.0 01K	Index
				Entworfen	11.04.	Schmitt J.			
				Geprüft	-	-			
				Normgepr.	-	-		Ersatz für: -	
Buchstabe	Datum / Blatt	wieland Elektrische Verbindungen					Benennung DURCHGANGSKLEMME terminal		
Änderung									

Weitergabe sowie Vervielfältigung dieses Dokuments, Verwertung und Mitteilung seines Inhalts sind verboten, soweit nicht ausdrücklich gestattet.
The reproduction, distribution and utilization of this document as well as the communication of its contents to others without express authorization is prohibited.

Diese Maße werden bei Abnahme besonders geprüft
Ausschließlich Prüfmaße
Mit Ø gekennzeichnete Maße sind nur für interne Zwecke gültig