product data sheet

item no. 25.320.3353.0

PCB connector 8113 B / 3 OB

PCB female connector with screw connection with rising cage clamp system, 3 poles, max. cross section: 2.5 mm², pitch: 5 mm, type of packing: carton, color: grey

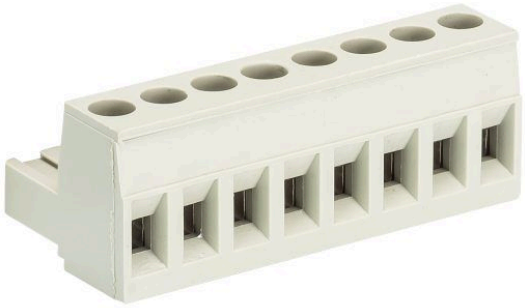

item no.	25.320.3353.0
EAN	4015573181793
order unit	100 piece(s)

certificates / approvals

technical data

general

modular spacing	5 mm
connection type	screw connection
soldering process	none
packaging	carton
number of poles	3
marking	no
fastening	none
mating direction towards connector	180°

technical data

nominal cross section	2.5 mm²
rated current	12 A
overvoltage category I	1000 V
overvoltage category II	400 V
overvoltage category III	250 V
rated impulse voltage	4 kV
wire strip length	6 mm

connection data

minimum cross section solid	0.14 mm²
maximum cross section solid	2.5 mm²
minimum cross section fine stranded	0.14 mm²
maximum cross section fine stranded	2.5 mm²
wire strip length	6 mm

technical data UL/CSA

cross section UL	22-12 AWG
voltage UL	300 V
current field wiring	15 A
current factory wiring	15 A
cross section CSA	22-12 AWG
voltage CSA	300 V
current CSA	15 A

other

type of insulation material	thermoplastic
color	grey
height	15 mm
length	15 mm
depth	18.2 mm
material attachment screw	steel
material contact base	CuSn
material contact surface	Sn
tightening moment	0.5 Nm

technical drawing

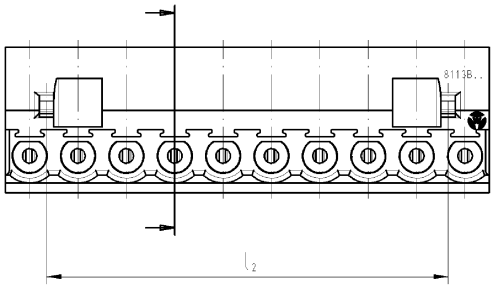

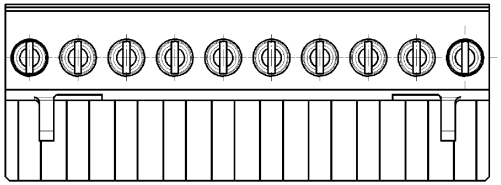

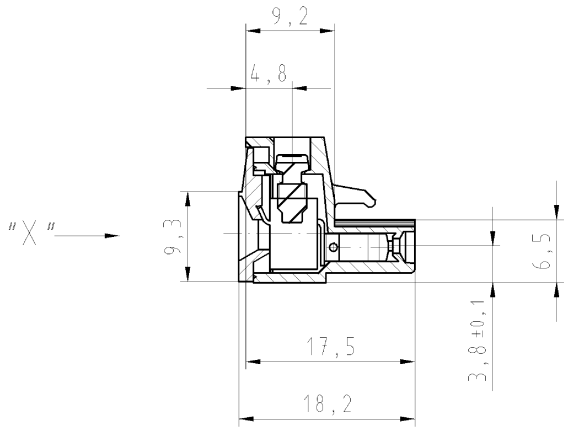

Ansicht "X"
view "X"

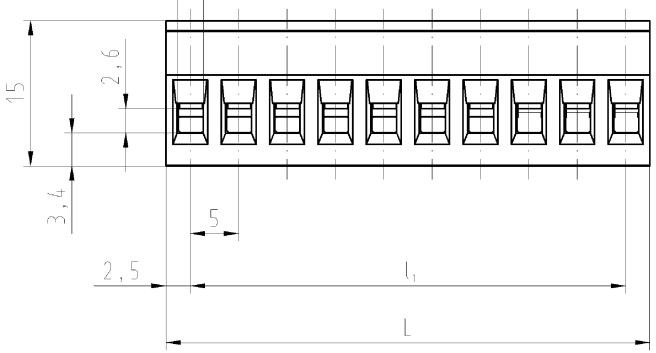

Artikel-Nr. part-no.	Pol-Z. pole	L	l_1	l_2	Typ type
25.320.3253.F	2	10	5	-	8113 B / 2 OB
25.320.3353.F	3	15	10	6,5	8113 B / 3 OB
25.320.3453.F	4	20	15	11,5	8113 B / 4 OB
25.320.3553.F	5	25	20	16,5	8113 B / 5 OB
25.320.3653.F	6	30	25	21,5	8113 B / 6 OB
25.320.3753.F	7	35	30	26,5	8113 B / 7 OB
25.320.3853.F	8	40	35	31,5	8113 B / 8 OB
25.320.3953.F	9	45	40	36,5	8113 B / 9 OB
25.320.4053.F	10	50	45	41,5	8113 B / 10 OB
25.320.4153.F	11	55	50	46,5	8113 B / 11 OB
25.320.4253.F	12	60	55	51,5	8113 B / 12 OB
25.320.4353.F	13	65	60	56,5	8113 B / 13 OB
25.320.4453.F	14	70	65	61,5	8113 B / 14 OB
25.320.4553.F	15	75	70	66,5	8113 B / 15 OB
25.320.4653.F	16	80	75	71,5	8113 B / 16 OB
25.320.4753.F	17	85	80	76,5	8113 B / 17 OB
25.320.4853.F	18	90	85	81,5	8113 B / 18 OB
25.320.4953.F	19	95	90	86,5	8113 B / 19 OB
25.320.5053.F	20	100	95	91,5	8113 B / 20 OB
25.320.5153.F	21	105	100	96,5	8113 B / 21 OB
25.320.5253.F	22	110	105	101,5	8113 B / 22 OB
25.320.5353.F	23	115	110	106,5	8113 B / 23 OB
25.320.5453.F	24	120	115	111,5	8113 B / 24 OB

gezeichnete Ausführung
10-polig
drawn version
10poles

Farbe/ colour	.F
grau / grey	.0
schwarz/black	.1
grün / green	.7

These dimensions will be especially checked at delivery
Only inspection dimensions
With /£ marked dimensions are only valid for internal use

Diese Maße werden bei Abnahme besonders geprüft
Ausschließlich Prüfmaße
Mit /£ gekennzeichnete Maße sind nur für interne Zwecke gültig

Weitergabe sowie Vervielfältigung dieses Dokuments, Verwertung und Mitteilung seines Inhalts sind verboten, soweit nicht ausdrücklich gestattet.
The reproduction, distribution and utilization of this document as well as the communication of its contents to others without express authorization is prohibited.

Weitere Daten siehe Katalog
further data see catalog

Zulässige Abweichungen nach DIN 7167/Permissible deviations acc. to DIN 7167. [This DIN-standard desbribes the envelope principle. According to the envelope principle the deviations of form and parallelism are limited by the size tolerances].

ja/yes ☒ Stoffverbots- und Deklarationsliste nach UU-TGM-05/03 ist einzuhalten. Conformity with Wieland document UU-TGM-05/03 [list of prohibited / declarable hazardous substances] to be declared!

Freitoleranz nach / General tolerance

CAD - Zeichnung, keine manuellen Änderungen / CAD - drawing, no manual modifications allowed

1.Verwendung: / First Use: -

Blatt: / Sheet: 1 von / of 1

Werkstoff/Material

Maßstab/Scale 2:1

Vol. mm³ Ofl./Surf. mm²

	2005	Tag/Date	Name
gezeichnet / drawn		27.07.	Schmitt J.
geprüft / checked		-	-
Normgep. / Stand. check		-	-

Zeichnung Nr./Drawing No. T 25.320.3253.0 01K Index

Maße in mm/Dimensions are in mm

Ersatz für/Replacement for: -

Index | Datum / Blatt / Date / Sheet | Änderung/Revision

wieland Elektrische Verbindungen

Type

Benennung/Title

LP_STECKKLEMME

indirekt steckbar, Schraubausführung Rastmass 5
Pluggable PCB terminal rising cage clamp, pitch 5

OU-PEM-08/91

25320325300 1K_4 CADM026 Schmitt 2005-07-27T10:22:49 1.000