Product data sheet

Item No. 27.336.1453.0

PCB pin header 8113 SEG / 14 / 28 W OB

PCB pin header, 14 poles, pitch: 5 mm, type of packing: carton, color: grey

Item No.	27.336.1453.0
EAN	4015573999114
Order Unit	50 Piece(s)

Certificates / Approvals

Technical data

General

Modular spacing	5 mm
Soldering process	Wave soldering
Packaging	Carton
Number of poles	28
Number of levels	2
Marking	No
Fastening	None
Mating direction towards (circuit) board	180°

Technical data

Rated current	10 A
Overvoltage Category I	400 V
Overvoltage Category II	400 V
Overvoltage Category III	250 V
Rated impulse voltage	4 kV

Technical Data UL/CSA

Voltage UL	300 V
Current field wiring	10 A
Current factory wiring	10 A
Voltage CSA	300 V
Current CSA	10 A

Other

Type of insulation material	Thermoplastic
Color	Grey

Height	22 mm
Length	72 mm
Depth	28.5 mm
Material contact base	CuSn
Material contact surface	Sn

Assembly

Item No.	Type	Description
25.220.4453.0	PCB connector 8113 B / 14 TOP OB	PCB female connector with front/top screw connection, 14 poles, max. cross section: 2.5 mm², pitch: 5 mm, type of packing: carton, color: grey
25.220.1453.0	PCB connector 8113 B / 14 TOP	PCB female connector with front/top screw connection, 14 poles, printedversion, max. cross section: 2.5 mm², pitch: 5 mm, type of packing: carton, color: grey
01.060.4453.0	PCB connector 8113 BK / 14 OB	PCB female connector with Crimp connection, 14 poles, max. cross section: 2.5 mm², pitch: 5 mm, type of packing: carton, color: grey
01.060.1453.0	PCB connector 8113 BK / 14	PCB female connector with Crimp connection, 14 poles, printed version, max. cross section: 2.5 mm², pitch: 5 mm, type of packing: carton, color: grey
25.320.4453.0	PCB connector 8113 B / 14 OB	PCB female connector with screw connection with rising cage clamp system, 14 poles, max. cross section: 2.5 mm², pitch: 5 mm, type of packing: carton, color: grey
25.320.1453.0	PCB connector 8113 B / 14	PCB female connector with screw connection with rising cage clamp system, 14 poles, printed version, max. cross section: 2.5 mm², pitch: 5 mm, type of packing: carton, color: grey
25.325.4453.0	PCB connector 8113 B / 14 VR OB	PCB female connector with screw connection with rising cage clamp system, 14 poles, max. cross section: 2.5 mm², pitch: 5 mm, type of packing: carton, color: grey
25.325.1453.0	PCB connector 8113 B / 14 VR	PCB female connector with screw connection with rising cage clamp system, 14 poles, printed version, max. cross section: 2.5 mm², pitch: 5 mm, type of packing: carton, color: grey
25.326.4453.0	PCB connector 8113 B / 14 VL OB	PCB female connector with screw connection with rising cage clamp system, 14 poles, max. cross section: 2.5 mm², pitch: 5 mm, type of packing: carton, color: grey
25.326.1453.0	PCB connector 8113 B / 14 VL	PCB female connector with screw connection with rising cage clamp system, 14 poles, printed version, max. cross section: 2.5 mm², pitch: 5 mm, type of packing: carton, color: grey
25.820.4453.0	PCB connector 8113 BFK /14 TOP OB	PCB female connector with tension spring connection, 14 poles, max. cross section: 2.5 mm², pitch: 5 mm, type of packing: carton, color: grey
25.820.1453.0	PCB connector 8113 BFK /14 TOP	PCB female connector with tension spring connection, 14 poles, printed version, max. cross section: 2.5 mm², pitch: 5 mm, type of packing: carton, color: grey

Technical drawing

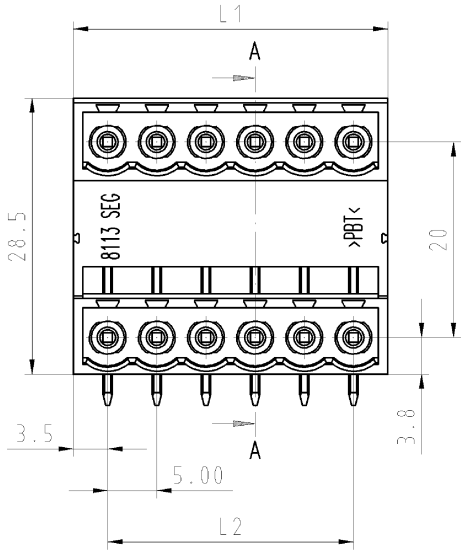

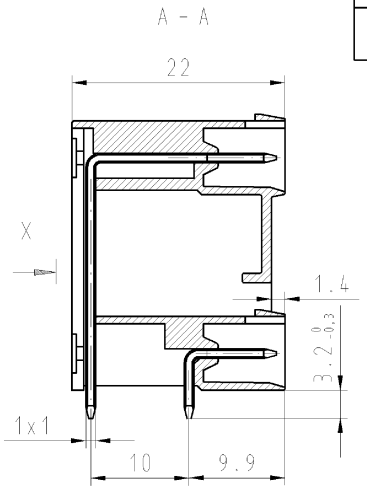

gezeichnet:
27.336.0653.0

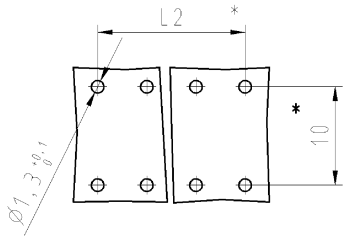

Lochbild/Layout

*) Lochbildtoleranz n.IEC 326 T3, sehr fein/
drill hole tolerances acc. to IEC 326 Part 3 very fine

Technische Daten
Technical Data

		VDE	UL	CSA
Bemessungsspannung rated voltage	V	250	300	300
Bemessungsstrom rated current	A	10	10	10
Brennbarkeitsklasse UL 94 V-0 flamability rating UL 94 V-0				
Verschmutzungsgrad 3/Überspannungskategorie III pollution degree 3/overvoltage category III				

Kontaktbasismaterial contact basis material	CuSn4 F47
Diffusionssperre diffusion barrier	Cu 2-3µm
Kontaktoberfläche contact surface	Sn 4-6µm
Isoliermaterial insulating material	PBT

Teile-Nr. part no.	Typ type	Polzahl pole	L1	L2
27.336.0253.0	8113 SEG / 2 / 4 W OB	4	12	5
27.336.0353.0	8113 SEG / 3 / 6 W OB	6	17	10
27.336.0453.0	8113 SEG / 4 / 8 W OB	8	22	15
27.336.0553.0	8113 SEG / 5 / 10 W OB	10	27	20
27.336.0653.0	8113 SEG / 6 / 12 W OB	12	32	25
27.336.0753.0	8113 SEG / 7 / 14 W OB	14	37	30
27.336.0853.0	8113 SEG / 8 / 16 W OB	16	42	35
27.336.0953.0	8113 SEG / 9 / 18 W OB	18	47	40
27.336.1053.0	8113 SEG / 10 / 20 W OB	20	52	45
27.336.1153.0	8113 SEG / 11 / 22 W OB	22	57	50
27.336.1253.0	8113 SEG / 12 / 24 W OB	24	62	55
27.336.1353.0	8113 SEG / 13 / 26 W OB	26	67	60
27.336.1453.0	8113 SEG / 14 / 28 W OB	28	72	65
27.336.1553.0	8113 SEG / 15 / 30 W OB	30	77	70
27.336.1653.0	8113 SEG / 16 / 32 W OB	32	82	75
27.336.1753.0	8113 SEG / 17 / 34 W OB	34	87	80
27.336.1853.0	8113 SEG / 18 / 36 W OB	36	92	85
27.336.1953.0	8113 SEG / 19 / 38 W OB	38	97	90
27.336.2053.0	8113 SEG / 20 / 40 W OB	40	102	95
27.336.2153.0	8113 SEG / 21 / 42 W OB	42	107	100
27.336.2253.0	8113 SEG / 22 / 44 W OB	44	112	105
27.336.2353.0	8113 SEG / 23 / 46 W OB	46	117	110
27.336.2453.0	8113 SEG / 24 / 48 W OB	48	122	115

Weitere Daten siehe Katalog
further data see catalog

Weitergabe sowie Vervielfältigung dieses Dokuments, Verwertung und Mitteilung seines Inhalts sind verboten, soweit nicht ausdrücklich gestattet. Alle Rechte für Patent-, Gebrauchsmuster- und Geschmacksmustereintragung vorbehalten. Reproduction and distribution of this document as well as the communication of its contents to others without express authorization is prohibited.

These dimensions will be especially checked at delivery
Only inspection dimensions
With /£ marked dimensions are only valid for internal use

Diese Maße werden bei Abnahme besonders geprüft
Ausschließlich Prüfmaße
Mit /£ gekennzeichnete Maße sind nur für interne Zwecke gültig

Tolerierung nach DIN 7167/Tolerance system acc. to DIN 7167.
[This DIN-Standard desbribes the envelope principle. According to the envelope principle the deviations of form and parallelism are limited by the size tolerances].

ja/yes ☒ Stoffverbots- und Deklarationsliste nach UU-TQM-05/03 ist einzuhalten.
Conformity with Wieland document UU-TQM-05/03 [list of prohibited / declarable hazardous substances] to be declared!

Freitoleranz nach
General tolerance

CAD - Zeichnung, keine manuellen Änderungen
CAD - drawing, no manual modifications allowed

1.Verwendung: -
First Use:

Blatt: 1 von 1
Sheet: 1 of 1

	/	Werkstoff/Material	2002	Tag/Date	Name	T	Zeichnung Nr./Drawing No.	Index
	/	Farbe : grau , ähnl.RAL 7032	gezeichnet drawn	30.04.	Bauer F		27.336.0253.0 01K	a
	/	colour :grey, sim. RAL 7032	geprüft checked	-	-			
	/	Maßstab/Scale 2:1	Normgepr. Stand. check	-	-		Maße in mm/Dimensions are in mm	
	/	Vol. mm³	Off./Surf. mm²	Ersatz für/Replacement for: -				
	/							
a	04.05.2006/	wieland Elektrische Verbindungen	Type 8113 SEG /./. W OB	Benennung/Title LP_STIFTLEISTE Rastermaß 5,00 PCB-Header pitch 5,00mm				
Index	Datum / Blatt Date / Sheet							
Änderung/Revision								

OU-PEM-08/91

2733602530 01K_4 CADW1044 Schmitt 2006-05-05 11:40:15 1:000