product data sheet

item no. 96.052.6053.1

device connector RST20I5S S1 M00V SW

RST® CLASSIC device connector, modular, straight, M20, number of poles 5, model male, connection type screw connection, rated voltage 250 V / 400 V, rated current 20 A, color of coding/ contact carrier black



item no.	96.052.6053.1
EAN	4015573862203
order unit	100 piece(s)

certificates / approvals

technical data

note

note	RST® terminals with screw clamping allow the connection of conductors without special preparation (without ferrules) according to EN 60999-1.positioning realised with flattened thread

general

rated current	20 A
rated voltage	250 V / 400 V
pollution degree	3
rated impulse voltage	4 kV
continuity resistor	0.55 mOhm
lockable	self-locking (unlocking by tool)
color of coding/ contact carrier	black
marking of poles	3, N, PE, 2, 1
color of separate adapter (if present)	black

connection data

connection cross section solid mm² max.	4 mm²
connection cross section solid mm² min.	0.75 mm²
connection cross section fine stranded mm² max.	4 mm²
connection cross section fine stranded mm² min.	0.75 mm²
terminations per pole	1
wire strip length	8 mm

model

model	male
connection type	screw connection
connecting thread metric	M20
angle of plug	straight
degree of protection (IP)	IP66/68 (3m;2h) /IP69
thickness of housings (electrical device)	0.5 mm

thickness of housings (electrical device)	8 mm

material

housing material	polyamide
halogen free	yes
contact material	CuZn
fire load	0 kWh/St
insulation components continous temperature	100 °C
surface finish	silver-plated

dimensions

length	66.2 mm
width	34.6 mm
height	34.6 mm

accessories

item no.	type	description
05.565.9953.1	cover for male connector SW	RST20i5/4 cover piece, for covering unused male connectors, color black
99.532.0000.7	cover for male connector SW	RST20i5/4 cover piece, for covering unused male connectors, with fastening belt, color black

technical drawing

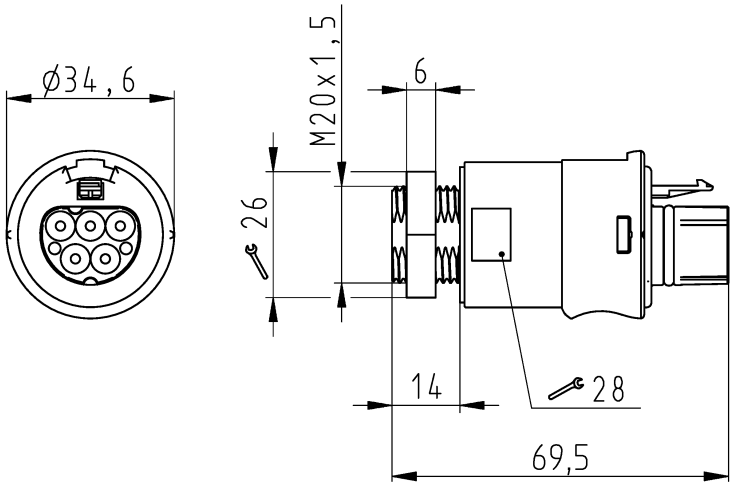

Auslieferungszustand
delivery status

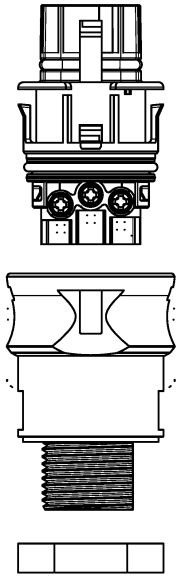

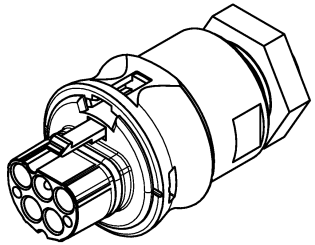

Verpackungseinheit: je 100 Stück
packaging unit: per 100

96.041.6053.1	RST20I4S B1 M00 SW	Schwarz/ black
96.041.6053.0	RST20I4S B1 M00 GL	Lichtgrau/ light grey
Bestellnummer/ order number	Typ/ type	Farbe/ color
Weitere Daten siehe KATALOG oder eKatalog additional data see CATALOG or eCATALOG	www.wieland-electric.com eshop.wieland-electric.com	

Oeffnungsmassbild siehe 96.031.2053.1 14K
opening dimension see 96.031.2053.1 14K

Tolerierung Size ISO 14405 Ⓔ / Tolerance system Size ISO 14405 Ⓔ.
(This ISO-standard describes the envelope principle. According to the envelope principle the deviations of form and parallelism are limited by the size tolerances).

ja/yes ☒ Stoffverbots- und Deklarationsliste nach WN 5020.010 ist einzuhalten. Conformity with Wieland document WN 5020.010 e (list of prohibited / declarable hazardous substances) to be declared!

Freitoleranz nach General tolerance

CAD - Zeichnung, keine manuellen Änderungen
CAD - drawing, no manual modifications allowed

1. Verwendung: First Use:

Blatt: 1 von 1 Sheet: 1 of 1

Index	Änderung / Revision	Datum / Blatt Date / Sheet
a		11.01.2023 /

Werkstoff / Material

Maßstab / Scale 1:1

	Name	Tag/Date
gezeichnet drawn	Nagengast	15.07.2015

Elektronische Freigabe
Electronic Release

Zeichnung Nr. / Drawing No.: T 96.052.6053.0 13K | Index: a

Maße in mm / Dimensions are in mm

Vol. mm³ | Ofl./Srf. mm²

Ersatz für / Replacement for:

Type

Benennung/Title: STECKERTEIL
male connector

wieland

Diese Maße werden bei Abnahme besonders geprüft
Ausschließlich Prüfmaße

Mit E gekennzeichnete Maße sind nur für interne Zwecke gültig

These dimensions will be especially checked at delivery
Only inspection dimensions

With E marked dimensions are only valid for internal use

Weitergabe sowie Vervielfältigung dieses Dokuments, Verwertung und Mitteilung seines Inhalts sind verboten, soweit nicht ausdrücklich gestattet.
The reproduction, distribution and utilization of this document as well as the communication of its contents to others without express authorization is prohibited.

2023-01-16 16:05:23 1.000