product data sheet

item no. 96.052.6153.1

device connector RST20I5S S1 M03V SW

RST® CLASSIC device connector, modular, straight, M16, number of poles 5, model male, connection type screw connection, rated voltage 250 V / 400 V, rated current 20 A, color of coding/ contact carrier black



item no.	96.052.6153.1
EAN	4015573862227
order unit	100 piece(s)

certificates / approvals

technical data

note

note	RST® terminals with screw clamping allow the connection of conductors without special preparation (without ferrules) according to EN 60999-1.positioning realised with flattened thread

general

rated current	20 A
rated voltage	250 V / 400 V
pollution degree	3
rated impulse voltage	4 kV
continuity resistor	0.55 mOhm
lockable	self-locking (unlocking by tool)
color of coding/ contact carrier	black
marking of poles	3, N, PE, 2, 1
color of separate adapter (if present)	black

connection data

connection cross section solid mm² max.	4 mm²
connection cross section solid mm² min.	0.75 mm²
connection cross section fine stranded mm² max.	4 mm²
connection cross section fine stranded mm² min.	0.75 mm²
terminations per pole	1
wire strip length	8 mm

model

model	male
connection type	screw connection
connecting thread metric	M16
angle of plug	straight
degree of protection (IP)	IP66/68 (3m;2h) /IP69
thickness of housings (electrical device)	0.5 mm

thickness of housings (electrical device)	8 mm

material

housing material	polyamide
halogen free	yes
contact material	CuZn
fire load	0.193 kWh/St
insulation components continous temperature	100 °C
surface finish	silver-plated

dimensions

length	69.2 mm
width	34.6 mm
height	34.6 mm

accessories

item no.	type	description
05.565.9953.1	cover for male connector SW	RST20i5/4 cover piece, for covering unused male connectors, color black
99.532.0000.7	cover for male connector SW	RST20i5/4 cover piece, for covering unused male connectors, with fastening belt, color black

technical drawing

These dimensions will be especially checked at delivery
Only inspection dimensions
With /E marked dimensions are only valid for internal use

Diese Maße werden bei Abnahme besonders geprüft
Ausschließlich Prüfmaße
Mit /E gekennzeichnete Maße sind nur für interne Zwecke gültig

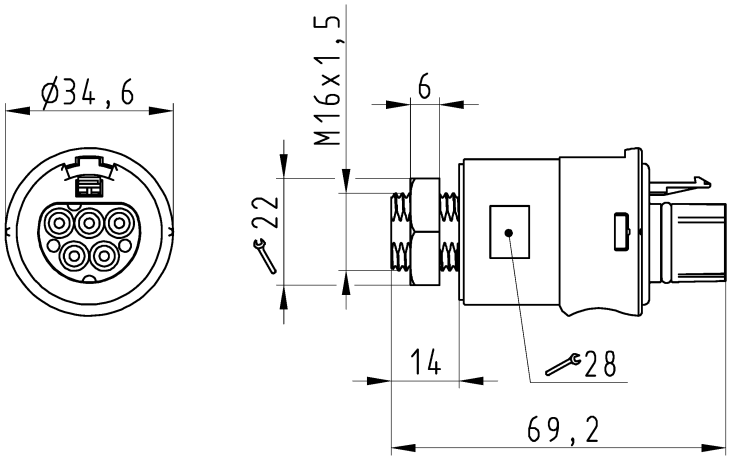

Auslieferungszustand

delivery status

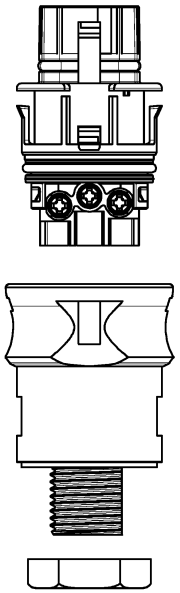

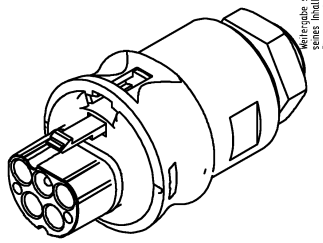

Verpackungseinheit: je 100 Stück
packaging unit: per 100

Bestellnummer /Order number	Typ /Type	Farbe /color
96.052.6153.1	RST20I5S S1 M03V SW	schwarz /black
96.052.6153.0	RST20I5S S1 M03V GL	lichtgrau /lightgrey

Weitere Daten siehe KATALOG oder eKatalog.
Additional data see CATALOG or eCatalog.

www.wieland-electric.com
eshop.wieland-electric.com

Oeffnungsmassbild siehe 96.031.2153.1 14K
opening dimension see 96.031.2153.1 14K

Tolerierung Size ISO 14405Ⓔ/Tolerance system Size ISO 14405Ⓔ.
(This ISO-standard describes the envelope principle. According to the envelope principle the deviations of form and parallelism are limited by the size tolerances).

nein/no ☒ Stoffverbots- und Deklarationsliste nach WN 5020.010 ist einzuhalten.
Conformity with Wieland document WN 5020.010 e (list of prohibited / declarable hazardous substances) to be declared!

Freitoleranz nach
General tolerance

CAD - Zeichnung, keine manuellen Änderungen
CAD - drawing, no manual modifications allowed

1.Verwendung: -
First Use:

Blatt: 1 von 1
Sheet: 1 of 1

Index	Datum / Blatt Date / Sheet	Maßstab/Scale	Werkstoff/Material	2015	Tag/Date	Name	T	Zeichnung Nr./Drawing No.	Index
	/			gezeichnet drawn	21.07.	HoffmannT		96.052.6153.0 13K	
	/			geprüft checked	-	-			
	/	1:1		Normgepr. Stand. check	-	-		Maße in mm/Dimensions are in mm	
	/	Vol. mm³	Ofl./Surf. mm²	Ersatz für/Replacement for: -					
	/			Type	Benennung/Title				
	/				STECKERTEIL male connector				

Änderung/Revision

wieland
www.wieland-electric.com

Weitergabe sowie Vervielfältigung dieses Dokuments, Verwertung und Mitteilung seines Inhalts sind verboten, soweit nicht ausdrücklich gestattet.
The reproduction, distribution and utilization of this document as well as the communication of its contents to others without express authorization is prohibited.