product data sheet

item no. 96.051.5053.1

device connector RST20I5S B1 M01 SW

RST® CLASSIC device connector, standard, straight, M25, number of poles 5, model female, connection type screw connection, rated voltage 250 V / 400 V, rated current 20 A, color of coding/ contact carrier black



item no.	96.051.5053.1
EAN	4015573862050
order unit	100 piece(s)

certificates / approvals

technical data

note

note	RST® terminals with screw clamping allow the connection of conductors without special preparation (without ferrules) according to EN 60999-1.positioning realised with flattened thread

general

rated current	20 A
rated voltage	250 V / 400 V
pollution degree	3
rated impulse voltage	4 kV
continuity resistor	0.55 mOhm
lockable	self-locking (unlocking by tool)
color of coding/ contact carrier	black
marking of poles	3, N, PE, 2, 1

connection data

connection cross section solid mm² max.	4 mm²
connection cross section solid mm² min.	0.75 mm²
connection cross section fine stranded mm² max.	4 mm²
connection cross section fine stranded mm² min.	0.75 mm²
terminations per pole	1
wire strip length	8 mm

model

model	female
connection type	screw connection
connecting thread metric	M25
angle of plug	straight
degree of protection (IP)	IP66/68 (3m;2h) /IP69
thickness of housings (electrical device)	0.5 mm

thickness of housings (electrical device)	8 mm

material

housing material	polyamide
halogen free	yes
contact material	CuZn
fire load	0.134 kWh/St
insulation components continous temperature	100 °C
surface finish	silver-plated

dimensions

length	51.4 mm
width	35 mm
height	35 mm

accessories

item no.	type	description
99.530.0000.7	cover for female connector SW	RST20i5/4 cover piece, for covering unused female connectors, with fastening belt, color black
Z5.565.9853.1	cover for female connector SW	RST20i5/4 cover piece, for covering unused female connectors, color black
05.564.8653.1	manual disconnect RST20i3/i5 SCHWARZ	Manual disconnect for later installation of RST connectors, color black
05.566.5253.1	distance ring RST	RST20/25 distance ring, for device connectors to ensure unlocking with screwdriver, color black
05.568.8853.1	distance ring RST	RST20/25 distance ring, for device connectors to ensure unlocking without tool,color black

technical drawing

These dimensions will be especially checked at delivery
Only inspection dimensions
With /E marked dimensions are only valid for internal use

Diese Maße werden bei Abnahme besonders geprüft
Ausschließlich Prüfmaße
Mit /E gekennzeichnete Maße sind nur für interne Zwecke gültig

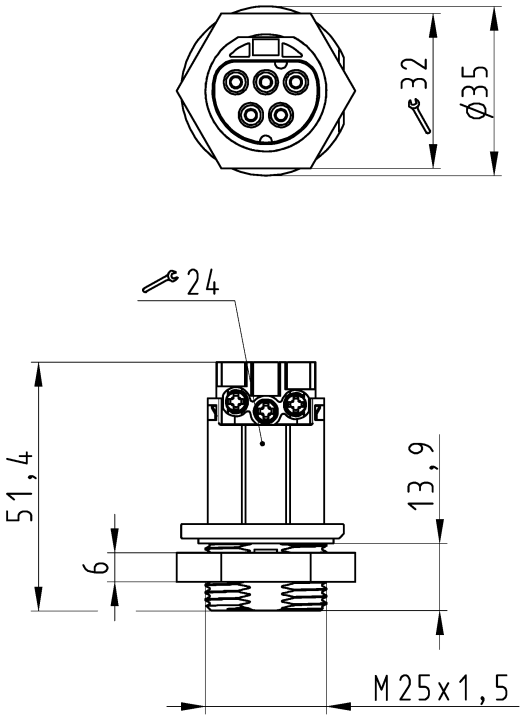

Auslieferungszustand

delivery status

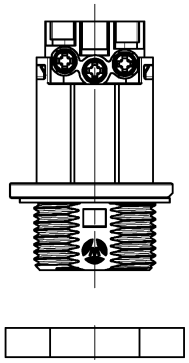

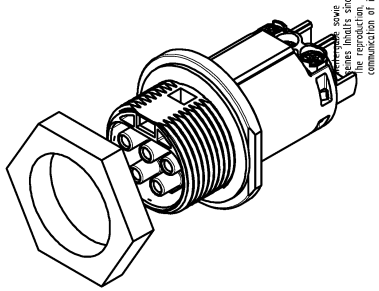

Verpackungseinheit: je 100 Stück
packaging unit: per 100

Bestellnummer /Order number	Typ /Type	Farbe /color
96.051.5053.1	RST20I5S B1 M01V SW	schwarz /black
96.051.5053.0	RST20I5S B1 M01V GL	lichtgrau /lightgrey

Weitere Daten siehe KATALOG oder eKatalog.
Additional data see CATALOG or eCatalog.

www.wieland-electric.com
eshop.wieland-electric.com

Oeffnungsmassbild siehe 96.031.1053.1 14K
opening dimension see 96.031.1053.1 14K

Tolerierung Size ISO 14405Ⓔ/Tolerance system Size ISO 14405Ⓔ.
(This ISO-standard describes the envelope principle. According to the envelope principle the deviations of form and parallelism are limited by the size tolerances).

ja/yes ☒ Stoffverbots- und Deklarationsliste nach WN 5020.010 ist einzuhalten. Conformity with Wieland document WN 5020.010 e (list of prohibited / declarable hazardous substances) to be declared!

Freitoleranz nach
General tolerance

CAD - Zeichnung, keine manuellen Änderungen
CAD - drawing, no manual modifications allowed

1.Verwendung: -
First Use:

Blatt: 1 von 1
Sheet: 1 of 1

Index	Datum / Blatt Date / Sheet	Änderung/Revision
	/	
	/	
	/	
	/	
	/	
	/	
	/	

Maßstab/Scale 1:1

Werkstoff/Material

2015	Tag/Date	Name
gezeichnet drawn	10.07.	Nagengast F.
geprüft checked	-	-
Normgepr. Stand. check	-	-

T

Zeichnung Nr./Drawing No. 96.051.5053.0 13K

Index

Maße in mm/Dimensions are in mm

Vol. mm³ Ofl./Surf. mm²

Ersatz für/Replacement for: -

wieland
www.wieland-electric.com

Type

Benennung/Title

BUCHSENTEIL
female contact

Vertragsgebiete sowie Vervielfältigung dieses Dokuments, Verwertung und Mitteilung seines Inhalts sind verboten, soweit nicht ausdrücklich gestattet. The reproduction, distribution and utilization of this document as well as the communication of its contents to others without express authorization is prohibited.

960515053013K_1 CADW3032 Nagengast 2015-07-14T15:26:22 1.000

QU-MEE-01/14 -