product data sheet

item no. 96.052.4553.1

connector RST20I5S S1 ZR3 V SW

RST® CLASSIC connector, straight, number of poles 5, male, connection type screw connection, rated voltage 250 V / 400 V, rated current 20 A, cable diameter 13 - 18 mm, color of coding/ contact carrier black



item no.	96.052.4553.1
EAN	4015573875937
order unit	100 piece(s)

certificates / approvals

technical data

note

note	RST® terminals with screw clamping allow the connection of conductors without special preparation (without ferrules) according to EN 60999-1.

general

rated current	20 A
rated voltage	250 V / 400 V
rated impulse voltage	4 kV
strain relief	yes
pollution degree	3
lockable	self-locking (unlocking by tool)
color of coding/ contact carrier	black
marking of poles	3, N, PE, 2, 1
color of housing inclusive strain relief	black
RAL-Nummer Codierung/Kontakteinsatz	9005

connection data

cable diameter max.	18 mm
cable diameter min.	13 mm
connection cross section solid mm² max.	4 mm²
connection cross section solid mm² min.	0.75 mm²
connection cross section fine stranded mm² max.	4 mm²
connection cross section fine stranded mm² min.	0.75 mm²
terminations per pole	1
connection cross section stranded mm² min.	0.75 mm²
connection cross section stranded mm² max.	4 mm²
sheath strip length	37 mm
wire strip length	8 mm

model

model	male
connection type	screw connection

degree of protection (IP)	IP66/68 (3m;2h) /IP69

material

housing material	polyamide
halogen free	yes
contact material	CuZn
fire load	0.361 kWh/St
insulation components continous temperature	100 °C
surface finish	silver-plated

dimensions

length	94.6 mm
width	35.4 mm
height	35.4 mm

accessories

item no.	type	description
05.565.9953.1	cover for male connector SW	RST20i5/4 cover piece, for covering unused male connectors, color black
99.532.0000.7	cover for male connector SW	RST20i5/4 cover piece, for covering unused male connectors, with fastening belt, color black

assembly

item no.	type	description
96.050.0153.1	distributor RST20I5B 3P1 F VG SW	RST® CLASSIC distributor, parallel connection, with fastening option, number of poles 5, rated voltage 250 V / 400 V, rated current 20 A, number of inputs 1, number of outputs 3, color of coding/ contact carrier black
96.051.5053.1	device connector RST20I5S B1 M01 SW	RST® CLASSIC device connector, standard, straight, M25, number of poles 5, model female, connection type screw connection, rated voltage 250 V / 400 V, rated current 20 A, color of coding/ contact carrier black
96.051.4553.1	connector RST20I5S B1 ZR3 SW	RST® CLASSIC connector, straight, number of poles 5, female, connection type screw connection, rated voltage 250 V / 400 V, rated current 20 A, cable diameter 13 - 18 mm, color of coding/ contact carrier black
96.051.6153.1	device connector RST20I5S B1 M03 SW	RST® CLASSIC device connector, modular, straight, M16, number of poles 5, model female, connection type screw connection, rated voltage 250 V / 400 V, rated current 20 A, color of coding/ contact carrier black
96.051.6053.1	device connector RST20I5S B1 M00 SW	RST® CLASSIC device connector, modular, straight, M20, number of poles 5, model female, connection type screw connection, rated voltage 250 V / 400 V, rated current 20 A, color of coding/ contact carrier black
96.053.6053.1	device connector RST20I5S B1 M90 SW	RST® CLASSIC device connector, modular, angled 90°, M20, number of poles 5, model female, connection type screw connection, rated voltage 250 V / 400 V, rated current 20 A, color of coding/ contact carrier black
96.053.6253.1	device connector RST20I5S B1 M91 SW	RST® CLASSIC device connector, modular, angled 90°, M25, number of poles 5, model female, connection type screw connection, rated voltage 250 V / 400 V, rated current 20 A, color of coding/ contact carrier black
96.055.6153.1	device connector RST20I5S B1 M13 SW	RST® CLASSIC device connector, modular, angled 7°, M16, number of poles 5, model female, connection type screw connection, rated voltage 250 V / 400 V, rated current 20 A, color of coding/ contact carrier black

technical drawing

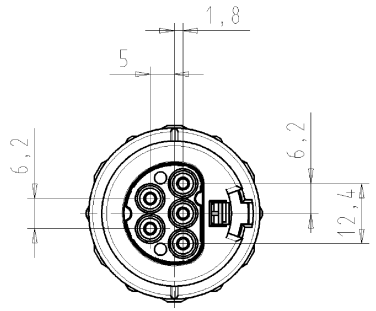

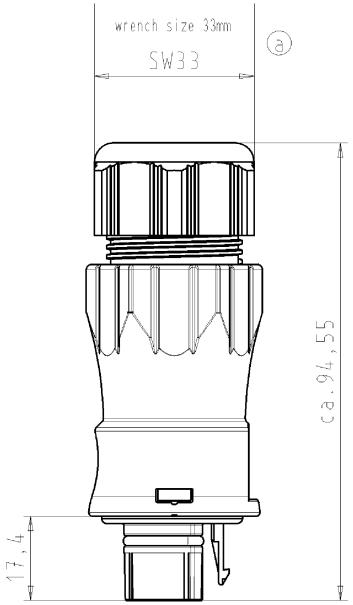

Auslieferungszustand
delivery status

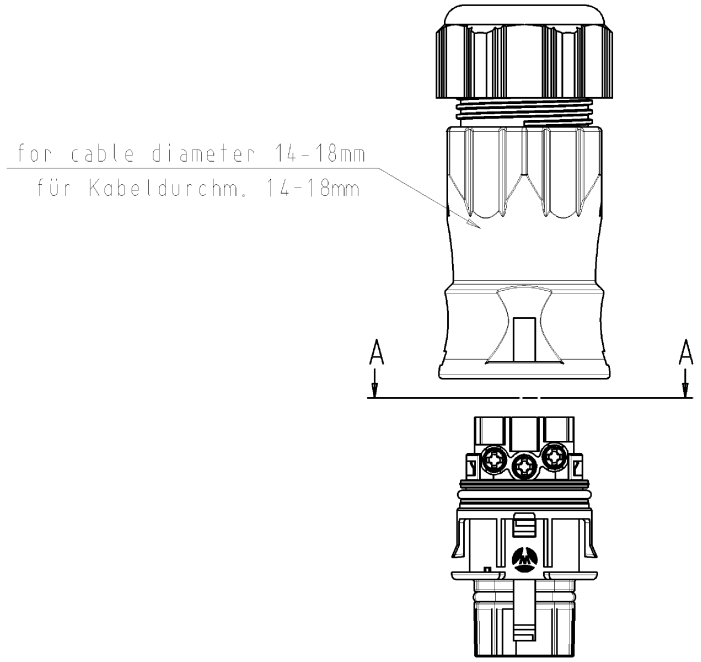

Verpackungseinheit: je 100 Stück
packaging unit: per 100

A-A

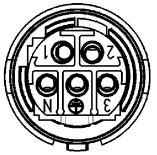

M1:1

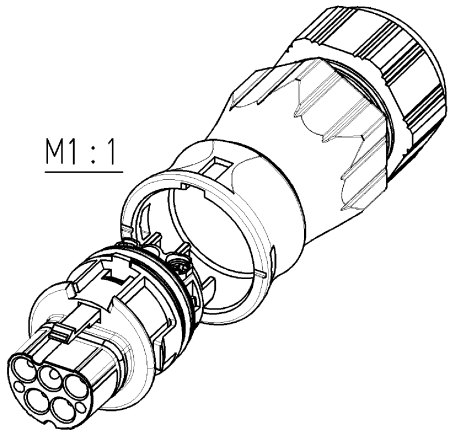

Weitergabe sowie Vervielfältigung dieses Dokuments, Verwertung und Mitteilung seines Inhalts sind verboten, soweit nicht ausdrücklich gestattet. The reproduction, distribution and utilization of this document as well as the communication of its contents to others without express authorization is prohibited.

Diese Maße werden bei Abnahme besonders geprüft
Ausschließlich Prüfmaße
Mit /E gekennzeichnete Maße sind nur für interne Zwecke gültig

These dimensions will be especially checked at delivery
Only inspection dimensions
With /E marked dimensions are only valid for internal use

Teile-Nr./ part-nr.	Farbe:/ color:	Type
96.052.4553.1	schwarz, ähnl. RAL 9005/ black, similar to RAL 9005	RST20I5S S1 ZR3 V SW
96.052.4553.0	lichtgrau, ähnl.RAL 7035/ lightgrey, similar to RAL 7035	RST20I5S S1 ZR3 V GL

Toleranzierung nach DIN 7167/Tolerance system acc. to DIN 7167.
[This DIN-standard desbribes the envelope principle. According to the envelope principle the deviations of form and parallelism are limited by the size tolerances].

nein/no ☒ Stoffverbots- und Deklarationsliste nach OU-TGM-05/03 ist einzuhalten. Conformity with Wieland document OU-TGM-05/03 [list of prohibited / declarable hazardous substances] to be declared!

Freitoleranz nach General tolerance

CAD - Zeichnung, keine manuellen Änderungen
CAD - drawing, no manual modifications allowed

1.Verwendung: First Use: -

Blatt: Sheet: 1 von of 1

Werkstoff/Material

Maßstab/Scale 1:1

Vol. mm³ Dfl./Surf. mm²

	Tag/Date	Name
2005		
gezeichnet drawn	13.12.	Kneitz
geprüft checked	-	-
Normgeprüft Stand. check	-	-

Ersatz für/Replacement for: -

Zeichnung Nr./Drawing No. T 96.052.4553.0 01K Index a

Maße in mm/Dimensions are in mm

a 21.02.2006/ Index Datum / Blatt Date / Sheet

Änderung/Revision

wieland
Elektrische Verbindungen

Type siehe Tabelle

Benennung/Title
STECKERTEIL_MIT_ZUGENTLASTUNG
male connector with cord grip
Schraubanschluß ohne Drahtschutz/screw-connection without wire protection
Standardkodierung O/standard-keying O (250V/400V/20A)

OU-PEM-08/91

9605245530O1K_4 G4W1019 Kneitz 2006-02-21T09:49:13 1.000