product data sheet

item no. 96.051.4553.1

connector RST20I5S B1 ZR3 SW

RST® CLASSIC connector, straight, number of poles 5, female, connection type screw connection, rated voltage 250 V / 400 V, rated current 20 A, cable diameter 13 - 18 mm, color of coding/ contact carrier black



item no.	96.051.4553.1
EAN	4015573875913
order unit	100 piece(s)

certificates / approvals

technical data

note

note	RST® terminals with screw clamping allow the connection of conductors without special preparation (without ferrules) according to EN 60999-1.

general

rated current	20 A
rated voltage	250 V / 400 V
rated impulse voltage	4 kV
strain relief	yes
pollution degree	3
lockable	self-locking (unlocking by tool)
color of coding/ contact carrier	black
marking of poles	3, N, PE, 2, 1
color of housing inclusive strain relief	black
RAL-Nummer Codierung/Kontakteinsatz	9005

connection data

cable diameter max.	18 mm
cable diameter min.	13 mm
connection cross section solid mm² max.	4 mm²
connection cross section solid mm² min.	0.75 mm²
connection cross section fine stranded mm² max.	4 mm²
connection cross section fine stranded mm² min.	0.75 mm²
terminations per pole	1
connection cross section stranded mm² min.	0.75 mm²
connection cross section stranded mm² max.	4 mm²
sheath strip length	37 mm
wire strip length	8 mm

model

model	female
connection type	screw connection

degree of protection (IP)	IP66/68 (3m;2h) /IP69

material

housing material	polyamide
halogen free	yes
contact material	CuZn
fire load	0.366 kWh/St
insulation components continous temperature	100 °C
surface finish	silver-plated

dimensions

length	96.6 mm
width	35.4 mm
height	35.4 mm

accessories

item no.	type	description
99.530.0000.7	cover for female connector SW	RST20i5/4 cover piece, for covering unused female connectors, with fastening belt, color black
Z5.565.9853.1	cover for female connector SW	RST20i5/4 cover piece, for covering unused female connectors, color black
05.564.8653.1	manual disconnect RST20i3/i5 SCHWARZ	Manual disconnect for later installation of RST connectors, color black

assembly

item no.	type	description
96.050.0153.1	distributor RST20I5B 3P1 F VG SW	RST® CLASSIC distributor, parallel connection, with fastening option, number of poles 5, rated voltage 250 V / 400 V, rated current 20 A, number of inputs 1, number of outputs 3, color of coding/ contact carrier black
96.052.5053.1	device connector RST20I5S S1 M01V SW	RST® CLASSIC device connector, standard, straight, M25, number of poles 5, model male, connection type screw connection, rated voltage 250 V / 400 V, rated current 20 A, color of coding/ contact carrier black
96.052.6153.1	device connector RST20I5S S1 M03V SW	RST® CLASSIC device connector, modular, straight, M16, number of poles 5, model male, connection type screw connection, rated voltage 250 V / 400 V, rated current 20 A, color of coding/ contact carrier black
96.052.6053.1	device connector RST20I5S S1 M00V SW	RST® CLASSIC device connector, modular, straight, M20, number of poles 5, model male, connection type screw connection, rated voltage 250 V / 400 V, rated current 20 A, color of coding/ contact carrier black
96.054.6053.1	device connector RST20I5S S1 M90V SW	RST® CLASSIC device connector, modular, angled 90°, M20, number of poles 5, model male, connection type screw connection, rated voltage 250 V / 400 V, rated current 20 A, color of coding/ contact carrier black
96.054.6253.1	device connector RST20I5S S1 M91V SW	RST® CLASSIC device connector, modular, angled 90°, M25, number of poles 5, model male, connection type screw connection, rated voltage 250 V / 400 V, rated current 20 A, color of coding/ contact carrier black
96.056.6153.1	device connector RST20I5S S1 M13V SW	RST® CLASSIC device connector, modular, angled 7°, M16, number of poles 5, model male, connection type screw connection, rated voltage 250 V / 400 V, rated current 20 A, color of coding/ contact carrier black

technical drawing

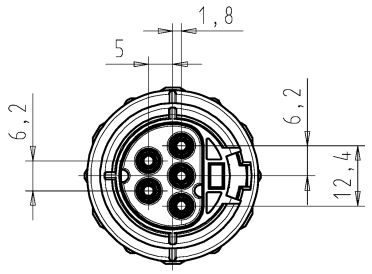

These dimensions will be especially checked at delivery
Only inspection dimensions
With /E marked dimensions are only valid for internal use

Diese Maße werden bei Abnahme besonders geprüft
Ausschließlich Prüfmaße
Mit /E gekennzeichnete Maße sind nur für interne Zwecke gültig

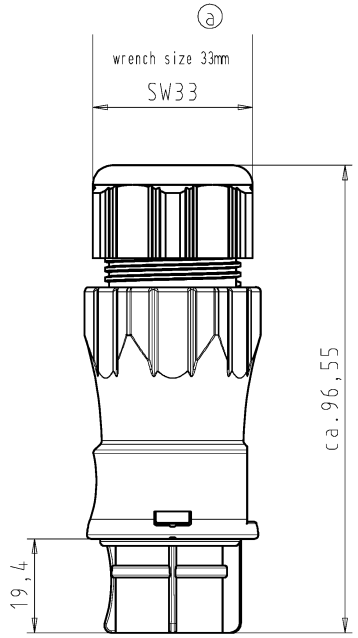

Auslieferungszustand
delivery status

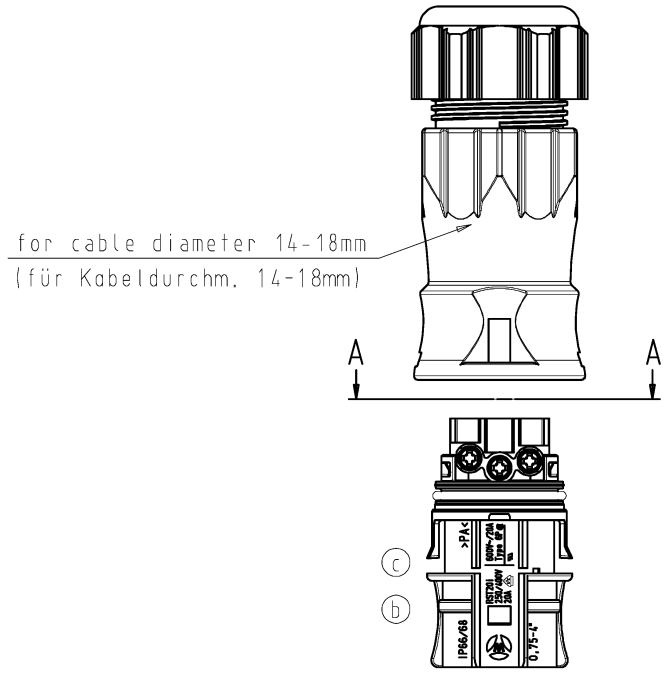

Verpackungseinheit: je 100 Stück
packaging unit: per 100

A-A



M1:1

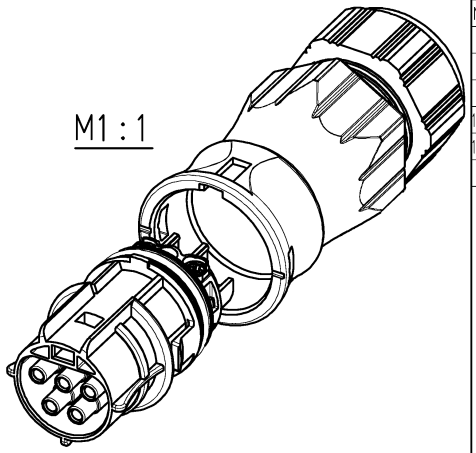

Weitergabe sowie Vervielfältigung dieses Dokuments, Verwertung und Mitteilung seines Inhalts sind verboten, soweit nicht ausdrücklich gestattet. Zuwiderhandlungen verpflichten zu Schadenersatz. Alle Rechte für den Fall der Patenterteilung oder Gebrauchsmuster- oder Geschmacksmustereintragung vorbehalten. Any reproduction, distribution and utilization of this document as well as the communication of its contents to others without express authorization is prohibited.

Teile-Nr./ part-nr.	Farbe:/ color:	Type
96.051.4553.1	schwarz, ähnl. RAL 9005/ black, similar to RAL 9005	RST2015S B1 ZR3 V SW
96.051.4553.0	lichtgrau, ähnl.RAL 7035/ lightgrey, similar to RAL 7035	RST2015S B1 ZR3 V GL

Tolerierung Size ISO 14405Ⓔ/Tolerance system Size ISO 14405Ⓔ.
(This ISO-standard describes the envelope principle. According to the envelope principle the deviations of form and parallelism are limited by the size tolerances).

nein/no ☒ Stoffverbots- und Deklarationsliste nach WN 5020.010 ist einzuhalten.
Conformity with Wieland document WN 5020.010 e (list of prohibited / declarable hazardous substances) to be declared!

Freitoleranz nach General tolerance

CAD - Zeichnung, keine manuellen Änderungen
CAD - drawing, no manual modifications allowed

1.Verwendung: First Use: -

Blatt: 1 von 1
Sheet: 1 of 1

Index	Datum / Blatt Date / Sheet	Änderung/Revision
c	15.12.2014/	Vol. mm³ Ofl./Surf. mm²
b	27.01.2011/	
a	21.02.2006/	

Werkstoff/Material

Maßstab/Scale 1:1

	Tag/Date	Name
2005 gezeichnet/drawn	12.12.	Kneitz
geprüft/checked	-	-
Normgepr. Stand. check	-	-

Ersatz für/Replacement for: -

Type: siehe Tabelle

Benennung/Title: BUCHSENTEIL_MIT_ZUGENTLASTUNG
female connector with cord grip
Schraubanschluß ohne Drahtschutz/screw-connection without wire protection
Standardkodierung 0/ standard-keying 0 (250V/400V/20A)

Zeichnung Nr./Drawing No. T 96.051.4553.0 01K Index c

Maße in mm/Dimensions are in mm

wieland
www.wieland-electric.com