product data sheet

item no. 96.051.4153.1

connector RST20I5S B1 ZR2 SW

RST® CLASSIC connector, straight, number of poles 5, female, connection type screw connection, rated voltage 250 V / 400 V, rated current 20 A, cable diameter 10 - 14 mm, color of coding/ contact carrier black



item no.	96.051.4153.1
EAN	4015573861848
order unit	100 piece(s)

certificates / approvals

technical data

note

note	RST® terminals with screw clamping allow the connection of conductors without special preparation (without ferrules) according to EN 60999-1.

general

rated current	20 A
rated voltage	250 V / 400 V
rated impulse voltage	4 kV
strain relief	yes
pollution degree	3
lockable	self-locking (unlocking by tool)
color of coding/ contact carrier	black
Pole codification	3, N, PE, 2, 1
color of housing inclusive strain relief	black
RAL-Nummer Codierung/Kontakteinsatz	9005

connection data

cable diameter max.	14 mm
cable diameter min.	10 mm
connection cross section solid mm² max.	4 mm²
connection cross section solid mm² min.	0.75 mm²
connection cross section fine stranded mm² max.	4 mm²
connection cross section fine stranded mm² min.	0.75 mm²
terminations per pole	1
connection cross section stranded mm² min.	0.75 mm²
connection cross section stranded mm² max.	4 mm²
sheath strip length	26.5 mm
wire strip length	8 mm

model

model	female
connection type	screw connection

degree of protection (IP)	IP66/68 (3m;2h) /IP69

material

housing material	polyamide
halogen free	yes
contact material	CuZn
fire load	0.291 kWh/St
insulation components continous temperature	100 °C
surface finish	silver-plated

dimensions

length	80.4 mm
width	34.6 mm
height	34.6 mm

accessories

item no.	type	description
99.530.0000.7	cover for female connector SW	RST20i5/4 cover piece, for covering unused female connectors, with fastening belt, color black
Z5.565.9853.1	cover for female connector SW	RST20i5/4 cover piece, for covering unused female connectors, color black
05.564.8653.1	manual disconnect RST20i3/i5 SCHWARZ	Manual disconnect for later installation of RST connectors, color black

assembly

item no.	type	description
96.050.0153.1	distributor RST20I5B 3P1 F VG SW	RST® CLASSIC compact distributor 1I / 3O, rated voltage 250 V / 400 V, rated current 20 A, number of poles 5, degree of protection (ip) IP66/68 (3m 2h) /IP69, number of inputs 1, number of outputs 3, pole codification 3, N, PE, 2, 1, color of coding/ contact carrier black, ral number coding/contact i
96.052.5053.1	device connector RST20I5S S1 M01V SW	RST® CLASSIC device connector, standard, straight, M25, number of poles 5, model male, connection type screw connection, rated voltage 250 V / 400 V, rated current 20 A, color of coding/ contact carrier black
96.052.6153.1	device connector RST20I5S S1 M03V SW	RST® CLASSIC device connector, modular, straight, M16, number of poles 5, model male, connection type screw connection, rated voltage 250 V / 400 V, rated current 20 A, color of coding/ contact carrier black
96.052.6053.1	device connector RST20I5S S1 M00V SW	RST® CLASSIC device connector, modular, straight, M20, number of poles 5, model male, connection type screw connection, rated voltage 250 V / 400 V, rated current 20 A, color of coding/ contact carrier black
96.054.6053.1	device connector RST20I5S S1 M90V SW	RST® CLASSIC device connector, modular, angled 90°, M20, number of poles 5, model male, connection type screw connection, rated voltage 250 V / 400 V, rated current 20 A, color of coding/ contact carrier black
96.054.6253.1	device connector RST20I5S S1 M91V SW	RST® CLASSIC device connector, modular, angled 90°, M25, number of poles 5, model male, connection type screw connection, rated voltage 250 V / 400 V, rated current 20 A, color of coding/ contact carrier black
96.056.6153.1	device connector RST20I5S S1 M13V SW	RST® CLASSIC device connector, modular, angled 7°, M16, number of poles 5, model male, connection type screw connection, rated voltage 250 V / 400 V, rated current 20 A, color of coding/ contact carrier black

technical drawing

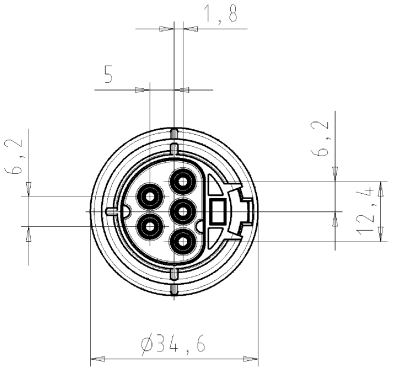

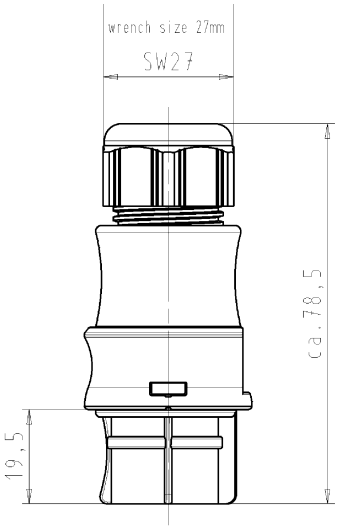

Auslieferungszustand
delivery status

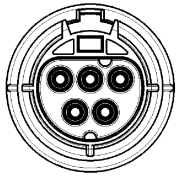

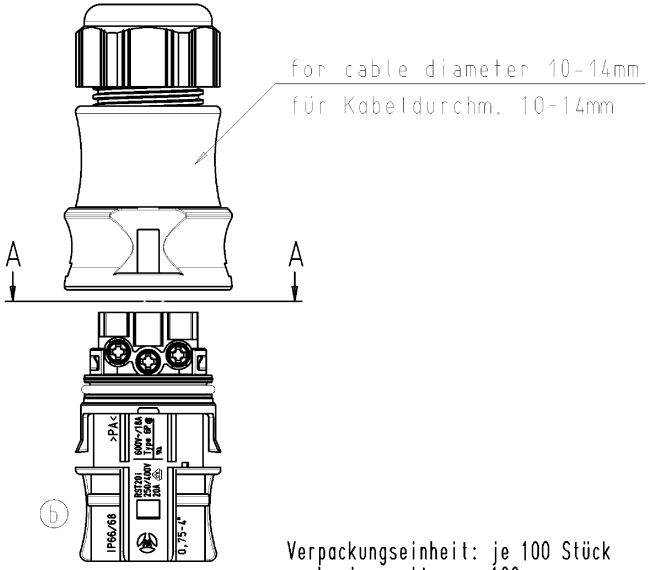

Verpackungseinheit: je 100 Stück
packaging unit: per 100

A-A



M1:1

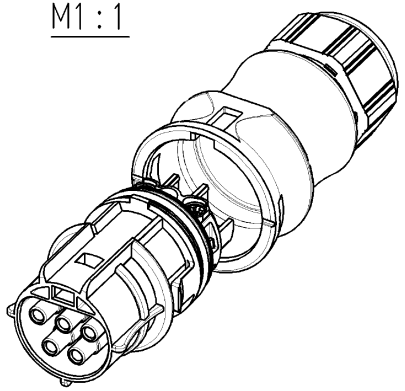

Weitergabe sowie Vervielfältigung dieses Dokuments, Verwertung und Mitteilung seines Inhalts sind verboten, soweit nicht ausdrücklich gestattet. The reproduction, distribution and utilization of this document as well as the communication of its contents to others without express authorization is prohibited.

Diese Maße werden bei Abnahme besonders geprüft
Ausschließlich Prüfmaße
Mit /E gekennzeichnete Maße sind nur für interne Zwecke gültig

These dimensions will be especially checked at delivery
Only inspection dimensions
With /E marked dimensions are only valid for internal use

Teile-Nr./ part-nr.	Farbe:/ color:	Type
96.051.4153.1	schwarz, ähnl. RAL 9005/ black, similar to RAL 9005	RST2015S B1 ZR2 V SW
96.051.4153.0	lichtgrau, ähnl.RAL 7035/ lightgrey, similar to RAL 7035	RST2015S B1 ZR2 V GL

Tolerierung nach DIN 7167/Tolerance system acc. to DIN 7167. (This DIN-standard desbribes the envelope principle. According to the envelope principle the deviations of form and parallelism are limited by the size tolerances).

nein/no ☒ Stoffverbots- und Deklarationsliste nach UU-TOM-05/03 ist einzuhalten. Conformity with Wieland document UU-TOM-05/03 (list of prohibited / declarable hazardous substances) to be declared!

Freitoleranz nach General tolerance

CAD - Zeichnung, keine manuellen Änderungen
CAD - drawing, no manual modifications allowed

1.Verwendung: First Use: -

Blatt: Sheet: 1 von of 1

			Werkstoff/Material	2005	Tag/Date	Name	Zeichnung Nr./Drawing No. T 96.051.4153.0 01K Index b
				gezeichnet drawn	22.08.	Kneitz	
			Maßstab/Scale 1:1	geprüft checked	-	-	
				Normgepr. Stand. check	-	-	Maße in mm/Dimensions are in mm
			Vol. mm³	Oft./Surf. mm²	Ersatz für/Replacement for: -		
b	27.01.2011/		wieland Elektrische Verbindungen	Type siehe Tabelle	Benennung/Title BUCHSENTEIL_MIT_ZUGENTLASTUNG female connector with cord grip Schraubanschluß ohne Drahtschutz/screw-connection without wire protection Standardkodierung0/standard-keying 0 (250V/400V/20A)		
a	02.12.2005/						
Index	Datum / Blatt Date / Sheet						
Änderung/Revision							

OU-PEM-08/91

96_051_4153_0_01K_11-01-27_13h18m23s_2 CADW2028 holet 2011-01-27T131856 1.000