product data sheet

item no. 96.030.0155.7

distributor RST20I3V 3P1 F V H GN0

RST® CLASSIC distributor, parallel connection, with fastening option, number of poles 3, rated voltage 250 V / 400 V, rated current 20 A, number of inputs 1, number of outputs 3, color of coding/ contact carrier leaves green



item no.	96.030.0155.7
EAN	4015573875319
order unit	100 piece(s)

certificates / approvals

RINA

technical data

general

rated current	20 A
rated voltage	250 V / 400 V
rated impulse voltage	4 kV
pollution degree	3
lockable	self-locking (unlocking by tool)
color of coding/ contact carrier	leaves green
marking of poles	1, 2, PE
RAL-number coding/insert connector	6002

model

number of inputs	1
number of outputs	3
type of fastening	yes
degree of protection (IP)	IP66/68 (3m;2h) /IP69
type of distributor	distribution block

material

housing material	polyamide
halogen free	yes
contact material	CuZn
fire load	0.229 kWh/St
insulation components continous temperature	100 °C
surface finish	silver-plated

dimensions

length	55.5 mm
width	85.8 mm
height	31.3 mm

accessories

item no.	type	description
05.564.4453.1	cover for male connector SW	RST20i3/2 cover piece, for covering unused male connectors, color black
99.414.6205.2	cover for female connector SW	RST20i3/2 cover piece, for covering unused female connectors, with fastening belt, color black
99.416.6205.2	cover for male connector SW	RST20i3/2 cover piece, for covering unused male connectors, with fastening belt, color black
Z5.564.4553.1	cover for female connector SW	RST20i3/2 cover piece, for covering unused female connectors, color black

technical drawing

Gezeichnete Ausführung: 96.030.0155.7
drawn construction: 96.030.0155.7

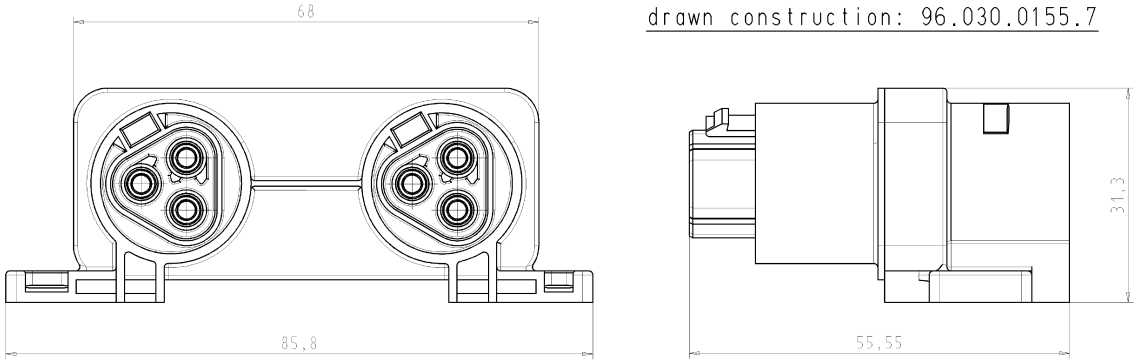

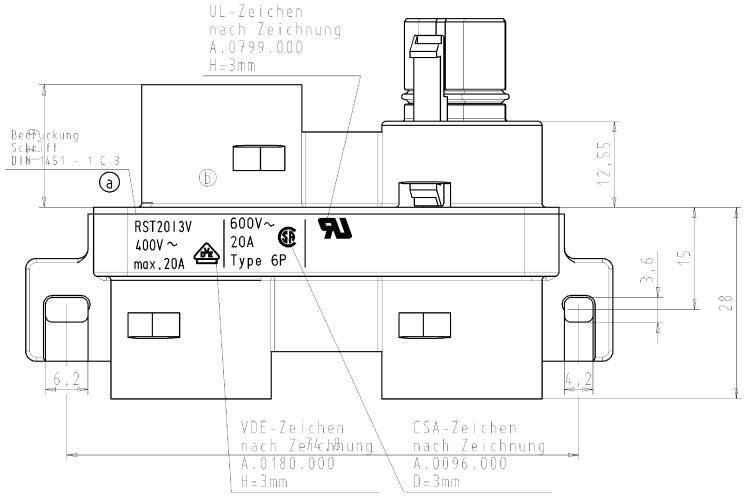

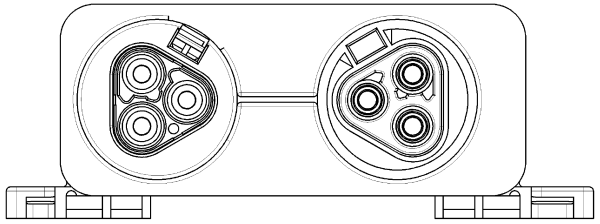

Ausführung: 96.030.0255.7
Variante: ohne Anschraubflansch
drawn construction: 96.030.0255.7
variante: without screwing flange
M1:1

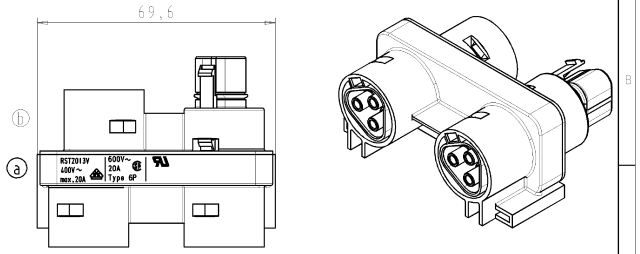

Type: RST2013V 3P1 V H GN02

Ausführung:96.030.0155.7
Variante: mit Anschraubflansch
drawn construction: 96.030.0155.7
variante: with screwing flange
M1:1

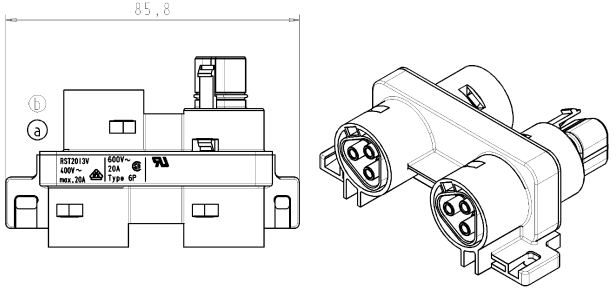

Type: RST2013V 3P1 F V H GN02

Verpackungseinheit: je 100 Stück
packaging unit: per 100

Toleranzierung nach DIN 7167/Tolerance system acc. to DIN 7167.
(This DIN-standard describes the envelope principle. According to the envelope principle the deviations of form and parallelism are limited by the size tolerances).

nein/no ☒ Stoffverbots- und Deklarationsliste nach QU-TDM-05/03 ist einzuhalten. / Conformity with Wieland document QU-TDM-05/03 (list of prohibited / declarable hazardous substances) to be declared!

Freitoleranz nach General Tolerance

CAD - Zeichnung, keine manuellen Änderungen / CAD - drawing, no manual modifications allowed

1.Verwendung: - / First Use: -

Blatt: 1 von 1 / Sheet: 1 of 1

		Werkstoff/Material	2005	Tag/Date	Name	Zeichnung Nr./Drawing No.	Index
		Farbe: grün, ähnl. RAL 6002 / color: green, similar to RAL 6002	gezeichnet/drawn	24.11.	Kreitz	96.030.0155.7 01K	a
	Maßstab/Scale 2:1		geprüft/checked	-	-		
			Normgep./Stand. check	-	-	Maße in mm/Dimensions are in mm	
	Vol. mm	Oft./Surf. mm²	Ersatz für/Replacement for: -				
a	18.01.2008/	wieland Elektrische Verbindungen	Type	Benennung/Title	VERTEILER für 400V / Distribution block for 400V		
Index	Datum / Blatt Date / Sheet						
Änderung/Revision							

9003000155013K_4 CADAZ0228 hdkt 2009-04-30T10:18:02

QU-PEM-08/91