product data sheet

item no. 96.033.6055.7

device connector RST20I3S B1 M90 H GN0

RST® CLASSIC device connector, modular, angled 90°, M20, number of poles 3, model female, connection type screw connection, rated voltage 250 V / 400 V, rated current 20 A, color of coding/ contact carrier leaves green



item no.	96.033.6055.7
EAN	4015573867864
order unit	100 piece(s)

certificates / approvals

technical data

note

note	RST® terminals with screw clamping allow the connection of conductors without special preparation (without ferrules) according to EN 60999-1.positioning realised with flattened thread

general

rated current	20 A
rated voltage	250 V / 400 V
pollution degree	3
rated impulse voltage	4 kV
continuity resistor	0.55 mOhm
lockable	self-locking (unlocking by tool)
color of coding/ contact carrier	leaves green
Pole codification	1, 2, PE
color of separate adapter (if present)	black

connection data

connection cross section solid mm² max.	6 mm²
connection cross section solid mm² min.	0.75 mm²
connection cross section fine stranded mm² max.	6 mm²
connection cross section fine stranded mm² min.	0.75 mm²
terminations per pole	1
wire strip length	8 mm

model

model	female
connection type	screw connection
connecting thread metric	M20

angle of plug	square
inclination	90 °
degree of protection (IP)	IP66/68 (3m;2h) /IP69
thickness of housings (electrical device)	0.5 mm
thickness of housings (electrical device)	8 mm

material

housing material	polyamide
halogen free	yes
contact material	CuZn
fire load	0.239 kWh/St
insulation components continous temperature	100 °C
surface finish	silver-plated

dimensions

length	73.4 mm
width	34.6 mm
height	54.3 mm

accessories

item no.	type	description
99.414.6205.2	cover for female connector SW	RST20i3/2 cover piece, for covering unused female connectors, with fastening belt, color black
Z5.564.4553.1	cover for female connector SW	RST20i3/2 cover piece, for covering unused female connectors, color black

technical drawing

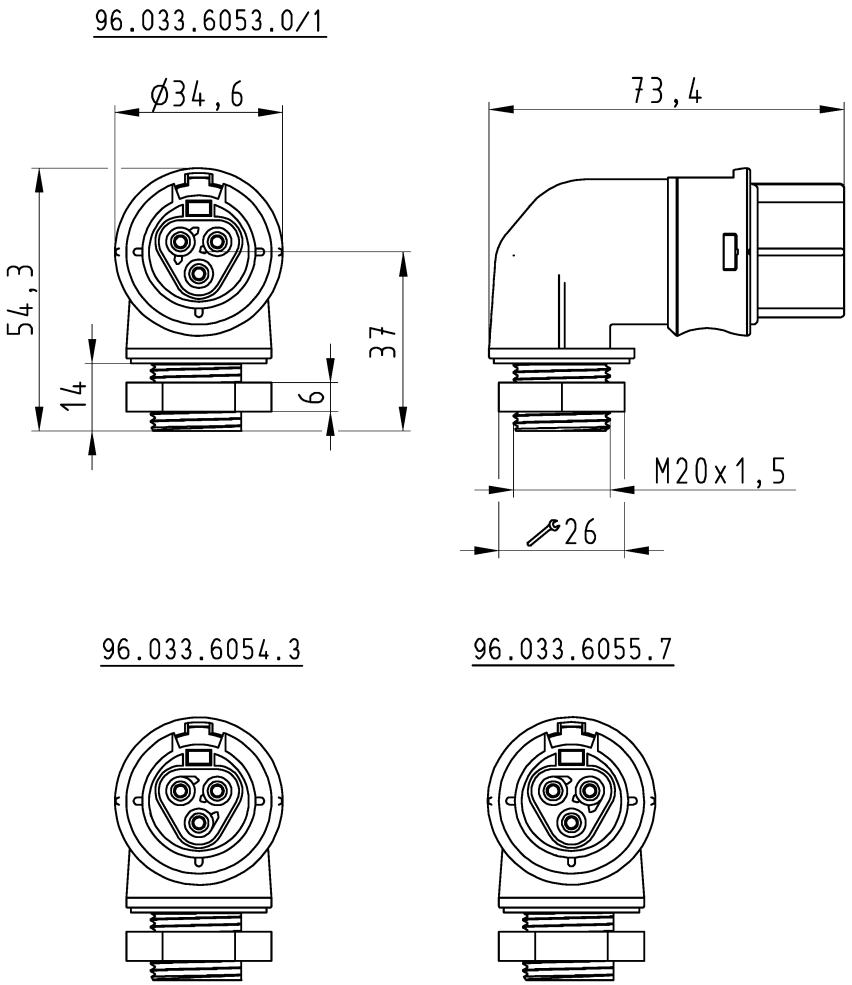

These dimensions will be especially checked at delivery
Only inspection dimensions
With /E marked dimensions are only valid for internal use

Diese Maße werden bei Abnahme besonders geprüft
Ausschließlich Prüfmaße
Mit /E gekennzeichnete Maße sind nur für interne Zwecke gültig

Auslieferungszustand

delivery status

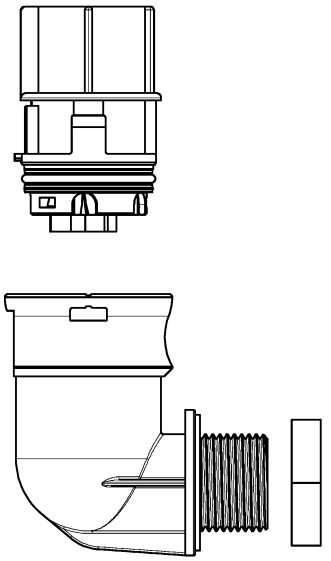

Verpackungseinheit: je 100 Stück
packaging unit: per 100

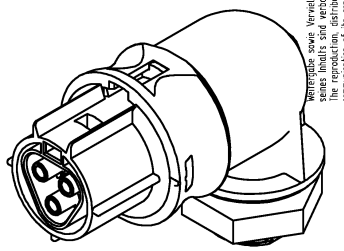

Weitergabe sowie Vervielfältigung dieses Dokuments, Verwertung und Mitteilung seines Inhalts sind verboten, soweit nicht ausdrücklich gestattet.
The reproduction, distribution and utilization of this document as well as the communication of its contents to others without express authorization is prohibited.

Bestellnummer /Order number	Typ /Type	Farbe /color
96.033.6055.7	RST20I3S B1 M90 H GN02	grün /green
96.033.6054.3	RST25I3S B1 M90 BG03	betongrau /concretegrey
96.033.6053.1	RST20I3S B1 M90 SW	schwarz /black
96.033.6053.0	RST20I3S B1 M90 GL	lichtgrau /lightgrey

Weitere Daten siehe KATALOG oder eKatalog.
Additional data see CATALOG or eCatalog.

www.wieland-electric.com
eshop.wieland-electric.com

Oeffnungsmassbild siehe 96.031.2053.1 14K
opening dimension see 96.031.2053.1 14K

Tolerierung Size ISO 14405Ⓔ/Tolerance system Size ISO 14405Ⓔ.
(This ISO-standard describes the envelope principle. According to the envelope principle the deviations of form and parallelism are limited by the size tolerances).

ja/yes ☒ Stoffverbots- und Deklarationsliste nach WN 5020.010 ist einzuhalten. Conformity with Wieland document WN 5020.010 e (list of prohibited / declarable hazardous substances) to be declared!

Freitoleranz nach
General tolerance

CAD - Zeichnung, keine manuellen Änderungen
CAD - drawing, no manual modifications allowed

1.Verwendung: -
First Use:

Blatt: 1 von 1
Sheet: 1 of 1

Index	Datum / Blatt Date / Sheet	Maßstab/Scale	Werkstoff/Material	2015	Tag/Date	Name		Zeichnung Nr./Drawing No.	Index
	/			gezeichnet drawn	06.08	HoffmannT	T	96.033.6053.0 13K	
	/			geprüft checked	-	-			
	/	1:1		Normgepr. Stand. check	-	-		Maße in mm/Dimensions are in mm	
	/	Vol. mm³	Ofl./Surf. mm²	Ersatz für/Replacement for: -					
	/			Type	Benennung/Title				
	/				BUCHSENTEIL_90GRAD female connector 90°				

Änderung/Revision

wieland
www.wieland-electric.com

960336053013K_1 CADW3034 HoffmannT 2015-09-08T11:43:42 1.000

QU-MEE-01/14 -