product data sheet

item no. 96.031.2155.7

device connector RST20I3F B2 M03 H GN0

RST® CLASSIC device connector, modular, straight, M16, number of poles 3, model female, connection type spring clamp connection, rated voltage 250 V / 400 V, rated current 20 A, color of coding/ contact carrier leaves green



item no.	96.031.2155.7
EAN	4015573875302
order unit	100 piece(s)

certificates / approvals

technical data

note

note	fine stranded and stranded conductors require cable end sleevepositioning realised with flattened thread

general

rated current	20 A
rated voltage	250 V / 400 V
pollution degree	3
rated impulse voltage	4 kV
continuity resistor	0.8 mOhm
lockable	self-locking (unlocking by tool)
color of coding/ contact carrier	leaves green
Pole codification	1, 2, PE
color of separate adapter (if present)	black

connection data

connection cross section solid mm² max.	2.5 mm²
connection cross section solid mm² min.	0.5 mm²
connection cross section fine stranded mm² max.	1.5 mm²
connection cross section fine stranded mm² min.	0.5 mm²
terminations per pole	2
wire strip length	14.5 mm

model

model	female
connection type	spring clamp connection
connecting thread metric	M16
angle of plug	straight
degree of protection (IP)	IP66/68 (3m;2h) /IP69
thickness of housings (electrical device)	0.5 mm
thickness of housings (electrical device)	8 mm

material

housing material	polyamide
halogen free	yes
contact material	CuZn
fire load	0.197 kWh/St
insulation components continous temperature	100 °C
surface finish	silver-plated

dimensions

length	71.2 mm
width	34.6 mm
height	34.6 mm

accessories

item no.	type	description
99.414.6205.2	cover for female connector SW	RST20i3/2 cover piece, for covering unused female connectors, with fastening belt, color black
Z5.564.4553.1	cover for female connector SW	RST20i3/2 cover piece, for covering unused female connectors, color black
06.502.4300.0	screwdriver DIN 5264 A 0,4 X 2,5	Screw driver according to DIN 5264 A, blade: 0.4x2.5 mm, long and straight version
95.101.1300.0	ferrule crimping tool 0,08 - 10 mm²	Crimping tool for ferrules, wire strip length: 7-28 mm, nominal cross section: 0,08-10 mm², length of tool: 180 mm
06.600.3627.0	ferrule DIN 46228-E1-12	RST ferrule, for spring clamp contact, with insulating sleeve, for cross section 1.0 mm²/AWG17
06.600.3727.0	ferrule DIN 46228-E0,75-12	RST ferrule, for spring clamp contact, with insulating sleeve, for cross section 0.75-1.0 mm²/ AWG17
06.600.3827.0	ferrule DIN 46228-E0,5-10	RST ferrule, for spring clamp contact, with insulating sleeve, for cross section 0.5 mm²/AWG20
06.600.3927.0	ferrule DIN 46228-E1,5-12	RST ferrule, for spring clamp contact, with insulating sleeve, for cross section 1.5 mm²/AWG16

technical drawing

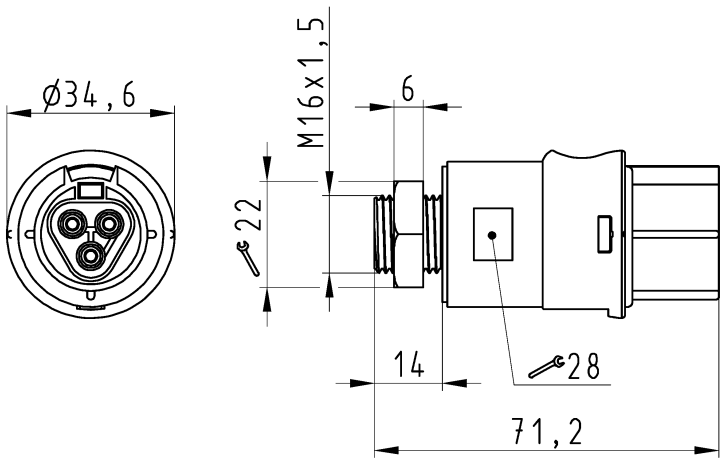

These dimensions will be especially checked at delivery
Only inspection dimensions
With /E marked dimensions are only valid for internal use
Diese Maße werden bei Abnahme besonders geprüft
Ausschließlich Prüfmaße
Mit /E gekennzeichnete Maße sind nur für interne Zwecke gültig

Auslieferungszustand

delivery status

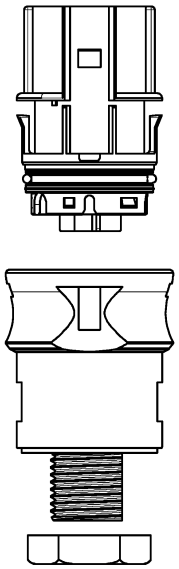

Verpackungseinheit: je 100 Stück
packaging unit: per 100

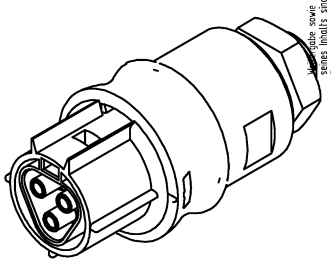

Weitergabe sowie Vervielfältigung dieses Dokuments, Verwertung und Mitteilung seines Inhalts sind verboten, soweit nicht ausdrücklich gestattet. Zuwiderhandlungen verpflichten zu Schadenersatz. Alle Rechte für den Fall der Patenterteilung oder Gebrauchsmuster-Eintragung vorbehalten. The reproduction, distribution and utilization of this document as well as the communication of its contents to others without express authorization is prohibited.

96.031.2155.7	RST2013F B2 M03 H GN02	grün /green
Bestellnummer /Order number	Typ /Type	Farbe /color

Weitere Daten siehe KATALOG oder eKatalog. Additional data see CATALOG or eCatalog. www.wieland-electric.com eshop.wieland-electric.com

Oeffnungsmassbild siehe 96.031.2153.1 14K
opening dimension see 96.031.2153.1 14K

Tolerierung Size ISO 14405Ⓔ/Tolerance system Size ISO 14405Ⓔ. (This ISO-standard describes the envelope principle. According to the envelope principle the deviations of form and parallelism are limited by the size tolerances).

ja/yes ☒ Stoffverbots- und Deklarationsliste nach WN 5020.010 ist einzuhalten. Conformity with Wieland document WN 5020.010 e (list of prohibited / declarable hazardous substances) to be declared!

Freitoleranz nach General tolerance

CAD - Zeichnung, keine manuellen Änderungen
CAD - drawing, no manual modifications allowed

1.Verwendung: First Use: -

Blatt: 1 von 1 Sheet: 1 of 1

Werkstoff/Material

Maßstab/Scale 1:1

	Tag/Date	Name
2015 gezeichnet drawn	22.07.	HoffmannT
geprüft checked	-	-
Normgepr. Stand. check	-	-

Zeichnung Nr./Drawing No. 96.031.2155.7 13K

Index

Maße in mm/Dimensions are in mm

Vol. mm³ Ofl./Surf. mm²

Ersatz für/Replacement for: -

Index | Datum / Blatt Date / Sheet

Änderung/Revision

wieland
www.wieland-electric.com

Type

Benennung/Title

BUCHSENTEIL
female connector

960312155713K_1 CADW3034 HoffmannT 2015-07-24T13:42:03 1.000

QU-MEE-01/14 -