product data sheet

item no. 96.032.5055.7

## device connector RST20I3S S1 M01VH GN0

RST® CLASSIC device connector, standard, straight, M25, number of poles 3, model male, connection type screw connection, rated voltage 250 V / 400 V, rated current 20 A, color of coding/ contact carrier leaves green



| | |
|---|---|
| item no. | 96.032.5055.7 |
| EAN | 4015573875173 |
| order unit | 100 piece(s) |

### certificates / approvals

### technical data

**note**

| | |
|---|---|
| note | RST® terminals with screw clamping allow the connection of conductors without special preparation (without ferrules) according to EN 60999-1.positioning realised with flattened thread |

**general**

| | |
|---|---|
| rated current | 20 A |
| rated voltage | 250 V / 400 V |
| pollution degree | 3 |
| rated impulse voltage | 4 kV |
| continuity resistor | 0.55 mOhm |
| lockable | self-locking (unlocking by tool) |
| color of coding/ contact carrier | leaves green |
| marking of poles | 1, 2, PE |

**connection data**

| | |
|---|---|
| connection cross section solid mm² max. | 6 mm² |
| connection cross section solid mm² min. | 0.75 mm² |
| connection cross section fine stranded mm² max. | 6 mm² |
| connection cross section fine stranded mm² min. | 0.75 mm² |
| terminations per pole | 1 |
| wire strip length | 8 mm |

**model**

| | |
|---|---|
| model | male |
| connection type | screw connection |
| connecting thread metric | M25 |
| angle of plug | straight |

| | |
|---|---|
| degree of protection (IP) | IP66/68 (3m;2h) /IP69 |
| thickness of housings (electrical device) | 0.5 mm |
| thickness of housings (electrical device) | 8 mm |

**material**

| | |
|---|---|
| housing material | polyamide |
| halogen free | yes |
| contact material | CuZn |
| fire load | 0.117 kWh/St |
| insulation components continous temperature | 100 °C |
| surface finish | silver-plated |

**dimensions**

| | |
|---|---|
| length | 48.1 mm |
| width | 35 mm |
| height | 35 mm |

## accessories

| item no. | type | description |
|---|---|---|
| 05.564.4453.1 | cover for male connector SW | RST20i3/2 cover piece, for covering unused male connectors, color black |
| 99.416.6205.2 | cover for male connector SW | RST20i3/2 cover piece, for covering unused male connectors, with fastening belt, color black |

technical drawing

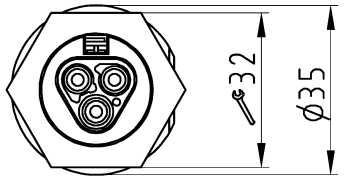


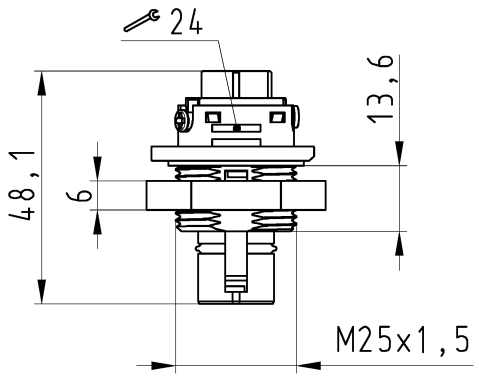


# Auslieferungszustand

delivery status

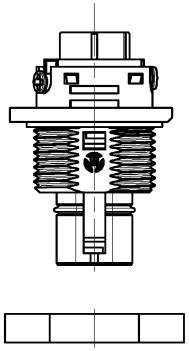

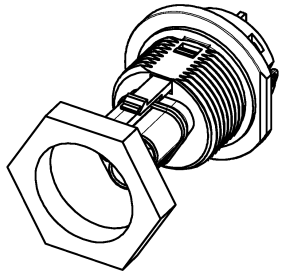

Verpackungseinheit: je 100 Stück
packaging unit: per 100

| | | |
|---|---|---|
| 96.032.5055.7 | RST2013S S1 M01VH GN02 | grün /green |
| Bestellnummer /Order number | Typ /Type | Farbe /color |

**Weitere Daten siehe KATALOG oder eKatalog. Additional data see CATALOG or eCatalog.** **www.wieland-electric.com eshop.wieland-electric.com**

Oeffnungsmassbild siehe 96.031.1053.1 14K
opening dimension see 96.031.1053.1 14K

Tolerierung Size ISO 14405Ⓔ/Tolerance system Size ISO 14405Ⓔ. (This ISO-standard describes the envelope principle. According to the envelope principle the deviations of form and parallelism are limited by the size tolerances).

nein/no ☒ Stoffverbots- und Deklarationsliste nach WN 5020.010 ist einzuhalten. Conformity with Wieland document WN 5020.010 e (list of prohibited / declarable hazardous substances) to be declared!

Freitoleranz nach General tolerance

CAD - Zeichnung, keine manuellen Änderungen CAD - drawing, no manual modifications allowed

1.Verwendung: First Use: -

Blatt: Sheet: 1 von of 1

Werkstoff/Material

Maßstab/Scale 1:1

Vol. mm³ Ofl./Surf. mm²

| | 2015 | Tag/Date | Name |
|---|---|---|---|
| gezeichnet drawn | | 10.07. | HoffmannT |
| geprüft checked | | - | - |
| Normgepr. Stand. check | | - | - |

Zeichnung Nr./Drawing No. 96.032.5055.7 13K

Index

Maße in mm/Dimensions are in mm

Ersatz für/Replacement for: -

Index / Datum / Blatt Date / Sheet / Änderung/Revision

wieland www.wieland-electric.com

Type

Benennung/Title

STECKERTEIL
male connector

Weitergabe sowie Vervielfältigung dieses Dokuments, Verwertung und Mitteilung seines Inhalts sind verboten, soweit nicht ausdrücklich gestattet. Zuwiderhandlungen verpflichten zu Schadenersatz. Alle Rechte für den Fall der Patenterteilung oder Gebrauchsmuster- oder Geschmacksmustereintragung vorbehalten. The reproduction, distribution and utilization of this document as well as the communication of its contents to others without express authorization is prohibited.

Diese Maße werden bei Abnahme besonders geprüft / These dimensions will be especially checked at delivery
Ausschließlich Prüfmaße / Only inspection dimensions
Mit / Ø gekennzeichnete Maße sind nur für interne Zwecke gültig / With / Ø marked dimensions are only valid for internal use