product data sheet

item no. 96.031.5055.7

device connector RST20I3S B1 M01 H GN0

RST® CLASSIC device connector, standard, straight, M25, number of poles 3, model female, connection type screw connection, rated voltage 250 V / 400 V, rated current 20 A, color of coding/ contact carrier leaves green



item no.	96.031.5055.7
EAN	4015573875210
order unit	100 piece(s)

certificates / approvals

technical data

note

note	RST® terminals with screw clamping allow the connection of conductors without special preparation (without ferrules) according to EN 60999-1.positioning realised with flattened thread

general

rated current	20 A
rated voltage	250 V / 400 V
pollution degree	3
rated impulse voltage	4 kV
continuity resistor	0.55 mOhm
lockable	self-locking (unlocking by tool)
color of coding/ contact carrier	leaves green
marking of poles	1, 2, PE

connection data

connection cross section solid mm² max.	6 mm²
connection cross section solid mm² min.	0.75 mm²
connection cross section fine stranded mm² max.	6 mm²
connection cross section fine stranded mm² min.	0.75 mm²
terminations per pole	1
wire strip length	8 mm

model

model	female
connection type	screw connection
connecting thread metric	M25
angle of plug	straight
degree of protection (IP)	IP66/68 (3m;2h) /IP69
thickness of housings (electrical device)	0.5 mm
thickness of housings (electrical device)	8 mm

material

housing material	polyamide
halogen free	yes
contact material	CuZn
fire load	0.136 kWh/St
insulation components continous temperature	100 °C
surface finish	silver-plated

dimensions

length	50.5 mm
width	35 mm
height	35 mm

accessories

item no.	type	description
99.414.6205.2	cover for female connector SW	RST20i3/2 cover piece, for covering unused female connectors, with fastening belt, color black
Z5.564.4553.1	cover for female connector SW	RST20i3/2 cover piece, for covering unused female connectors, color black
05.566.5253.1	distance ring RST	RST20/25 distance ring, for device connectors to ensure unlocking with screwdriver, color black
05.568.8853.1	distance ring RST	RST20/25 distance ring, for device connectors to ensure unlocking without tool,color black

technical drawing

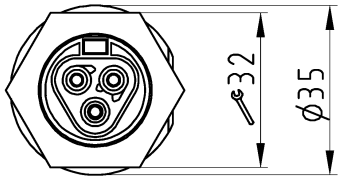

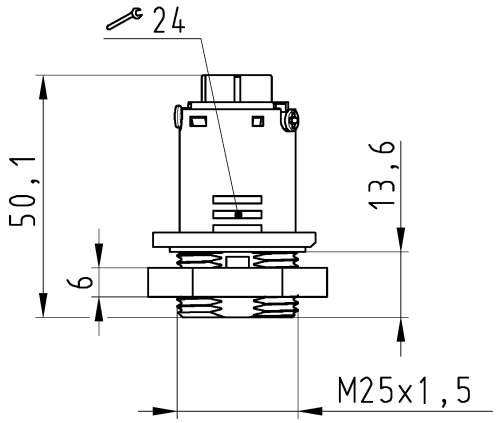

These dimensions will be especially checked at delivery
Only inspection dimensions
With Æ marked dimensions are only valid for internal use
Diese Maße werden bei Abnahme besonders geprüft
Ausschließlich Prüfmaße
Mit Æ gekennzeichnete Maße sind nur für interne Zwecke gültig

Auslieferungszustand

delivery status

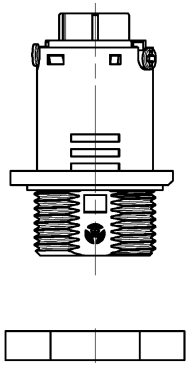

Verpackungseinheit: je 100 Stück
packaging unit: per 100

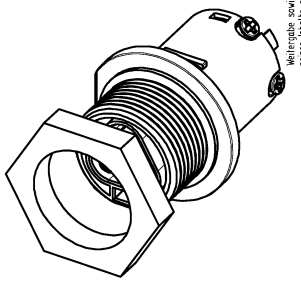

Weitergabe sowie Vervielfältigung dieses Dokuments, Verwertung und Mitteilung seines Inhalts sind verboten, soweit nicht ausdrücklich gestattet. Zuwiderhandlungen verpflichten zu Schadenersatz. Alle Rechte für den Fall der Patenterteilung oder Gebrauchsmuster-Eintragung vorbehalten.
The reproduction, distribution and utilization of this document as well as the communication of its contents to others without express authorization is prohibited.

96.031.5055.7	RST2013S B1 M01 H GN02	grün /green
Bestellnummer /Order number	Typ /Type	Farbe /color

Weitere Daten siehe KATALOG oder eKatalog. Additional data see CATALOG or eCatalog. **www.wieland-electric.com eshop.wieland-electric.com**

Oeffnungsmassbild siehe 96.031.1053.1 14K
opening dimension see 96.031.1053.1 14K

Tolerierung Size ISO 14405Ⓔ/Tolerance system Size ISO 14405Ⓔ. (This ISO-standard describes the envelope principle. According to the envelope principle the deviations of form and parallelism are limited by the size tolerances).

nein/no ☒ Stoffverbots- und Deklarationsliste nach WN 5020.010 ist einzuhalten. Conformity with Wieland document WN 5020.010 e (list of prohibited / declarable hazardous substances) to be declared!

Freitoleranz nach General tolerance

CAD - Zeichnung, keine manuellen Änderungen CAD - drawing, no manual modifications allowed

1.Verwendung: First Use: -

Blatt: Sheet: 1 von of 1

Werkstoff/Material

Maßstab/Scale 1:1

Vol. mm³ Ofl./Surf. mm²

	2015	Tag/Date	Name
gezeichnet drawn		09.07.	HoffmannT
geprüft checked		-	-
Normgepr. Stand. check		-	-

Zeichnung Nr./Drawing No. 96.031.5055.7 13K

Index

Maße in mm/Dimensions are in mm

Ersatz für/Replacement for: -

Index / Datum / Blatt Date / Sheet / Änderung/Revision

wieland www.wieland-electric.com

Type

Benennung/Title

BUCHSENTEIL
female connector

960315055713K_1 CADW3034 HoffmannT 2015-07-15T13:12:38 1.000

QU-MEE-01/14 -