product data sheet

item no. 96.031.4255.7

connector RST20I3S B1 ZRXSH GN0

RST® CLASSIC connector, splitter connector, number of poles 3, female, connection type screw connection, rated voltage 250 V / 400 V, rated current 20 A, cable diameter 6 - 10 mm, color of coding/ contact carrier leaves green



item no.	96.031.4255.7
EAN	4015573875159
order unit	100 piece(s)

certificates / approvals

technical data

note

note	RST® terminals with screw clamping allow the connection of conductors without special preparation (without ferrules) according to EN 60999-1.

general

rated current	20 A
rated voltage	250 V / 400 V
rated impulse voltage	4 kV
strain relief	yes
pollution degree	3
lockable	self-locking (unlocking by tool)
color of coding/ contact carrier	leaves green
Pole codification	1, 2, PE
color of housing inclusive strain relief	black
RAL-Nummer Codierung/Kontakteinsatz	6002

connection data

cable diameter max.	10 mm
cable diameter min.	6 mm
connection cross section solid mm² max.	6 mm²
connection cross section solid mm² min.	0.75 mm²
connection cross section fine stranded mm² max.	6 mm²
connection cross section fine stranded mm² min.	0.75 mm²
terminations per pole	1
connection cross section stranded mm² min.	0.75 mm²
connection cross section stranded mm² max.	6 mm²
sheath strip length	40.5 mm
wire strip length	8 mm

model

model	female
connection type	screw connection
degree of protection (IP)	IP66/68 (3m;2h) /IP69

material

housing material	polyamide
halogen free	yes
contact material	CuZn
fire load	0.514 kWh/St
insulation components continous temperature	100 °C
surface finish	silver-plated

dimensions

length	97 mm
width	59 mm
height	38 mm

accessories

item no.	type	description
99.414.6205.2	cover for female connector SW	RST20i3/2 cover piece, for covering unused female connectors, with fastening belt, color black
Z5.564.4553.1	cover for female connector SW	RST20i3/2 cover piece, for covering unused female connectors, color black

assembly

item no.	type	description
96.030.0155.7	distributor RST20I3V 3P1 F V H GN0	RST® CLASSIC distribution block 1I / 3O, rated voltage 250 V / 400 V, rated current 20 A, number of poles 3, degree of protection (ip) IP66/68 (3m 2h) /IP69, number of inputs 1, number of outputs 3, pole codification 1, 2, PE, color of coding/ contact carrier leaves green, ral number coding/contact
96.032.5055.7	device connector RST20I3S S1 M01VH GN0	RST® CLASSIC device connector, standard, straight, M25, number of poles 3, model male, connection type screw connection, rated voltage 250 V / 400 V, rated current 20 A, color of coding/ contact carrier leaves green
96.233.1031.7	cable assembly RST20I3K1BS 25 H 10GN0	RST® CLASSIC connecting cable, female - male, number of poles 3, rated voltage 250 V / 400 V, rated current 20 A, cable type H07RN-F, fire class Eca, total length 1 m, nominal cross section conductor 2.5 mm², color of coding/ contact carrier leaves green
96.032.6155.7	device connector RST20I3S S1 M03VH GN0	RST® CLASSIC device connector, modular, straight, M16, number of poles 3, model male, connection type screw connection, rated voltage 250 V / 400 V, rated current 20 A, color of coding/ contact carrier leaves green
96.032.6055.7	device connector RST20I3S S1 M00VH GN0	RST® CLASSIC device connector, modular, straight, M20, number of poles 3, model male, connection type screw connection, rated voltage 250 V / 400 V, rated current 20 A, color of coding/ contact carrier leaves green
96.034.6055.7	device connector RST20I3S S1 M90VH GN0	RST® CLASSIC device connector, modular, angled 90°, M20, number of poles 3, model male, connection type screw connection, rated voltage 250 V / 400 V, rated current 20 A, color of coding/ contact carrier leaves green
96.036.6155.7	device connector RST20I3S B1 M13 L GN02	RST20i3 device connector (7° angled) M16, 3 pole, male, screw connection, modular, application 250/400V with PE, 20A, coding color leaf green, color of housing black

technical drawing

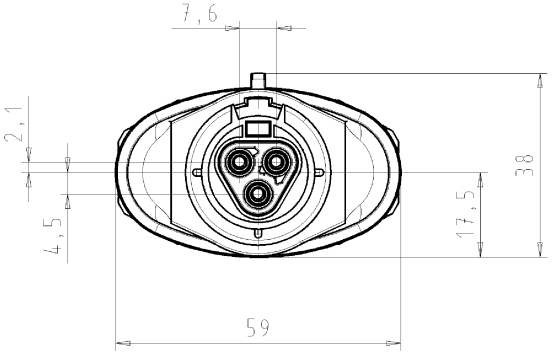

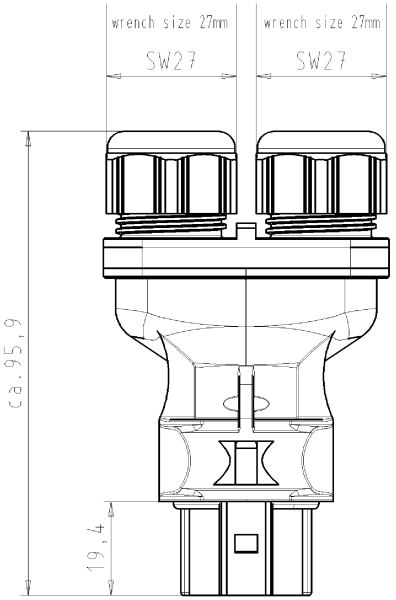

These dimensions will be especially checked at delivery
Only inspection dimensions
With ∉ marked dimensions are only valid for internal use

Diese Maße werden bei Abnahme besonders geprüft
Ausschließlich Prüfmaße
Mit ∉ gekennzeichnete Maße sind nur für interne Zwecke gültig

Auslieferungszustand
delivery status

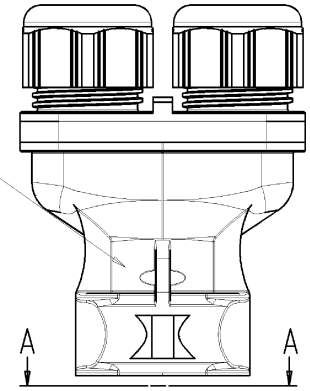

for cable diameter 6-10mm
für Kabeldurchm. 6-10mm

color: black,
similar to RAL 9005
Farbe: schwarz,
ähnl. RAL 9005

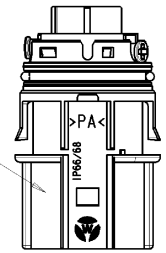

color: green,
similar to RAL 6002
Farbe: grün,
ähnl. RAL 6002

Verpackungseinheit: je 100 Stück
packaging unit: per 100

A-A



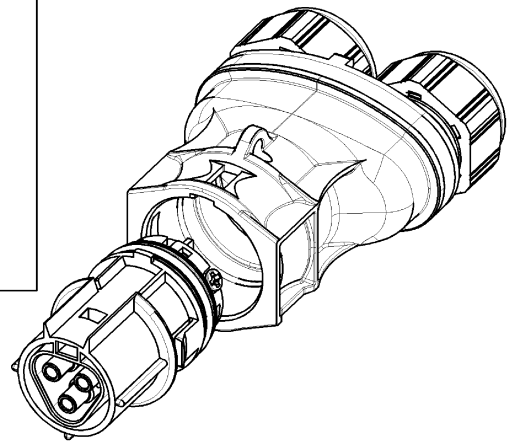

Type: RST2013S B1 ZRXS H GN02

Weitergabe sowie Vervielfältigung dieses Dokuments, Verwertung und Mitteilung seines Inhalts sind verboten, soweit nicht ausdrücklich gestattet. The reproduction, distribution and utilization of this document as well as the communication of its contents to others without express authorization is prohibited.

Tolerierung nach DIN 7167/Tolerance system acc. to DIN 7167.
[This DIN-standard desbribes the envelope principle. According to the envelope principle the deviations of form and parallelism are limited by the size tolerances].

nein/no ☒ Stoffverbots- und Deklarationsliste nach UU-TGM-05/03 ist einzuhalten. Conformity with Wieland document UU-TGM-05/03 [list of prohibited / declarable hazardous substances] to be declared!

Freitoleranz nach
General tolerance

CAD - Zeichnung, keine manuellen Änderungen
CAD - drawing, no manual modifications allowed

1.Verwendung:
First Use: -

Blatt: 1 von 1
Sheet: 1 of 1

	/	Werkstoff/Material	2005	Tag/Date	Name	Zeichnung Nr./Drawing No.	Index
	/		gezeichnet drawn	02.11.	Kneitz	96.031.4255.7 01K	
	/	Maßstab/Scale 1:1	geprüft checked	-	-		
	/		Normgeprüft Stand. check	-	-	Maße in mm/Dimensions are in mm	
	/	Vol. mm³	Oft./Surf. mm²	Ersatz für/Replacement for: -			
	/	wieland Elektrische Verbindungen	Type	Benennung/Title BUCHSENTEIL_MIT_DOPPELZUGE			
Index	Datum / Blatt Date / Sheet			female connector with double cord grip			
Änderung/Revision				Schraubanschluss ohne Drahtschutz für 400V screw-connection without wire-protection for 400V			

OU-PEM-08/91

9603142557.01K_4 CADW1019 Kneitz 2005-11-02T14:18:36 1.000