product data sheet

item no. 96.032.4155.7

connector RST20I3S S1 ZR2 VH GN0

RST® CLASSIC connector, straight, number of poles 3, male, connection type screw connection, rated voltage 250 V / 400 V, rated current 20 A, cable diameter 10 - 14 mm, color of coding/ contact carrier leaves green



item no.	96.032.4155.7
EAN	4015573875111
order unit	100 piece(s)

certificates / approvals

technical data

note

note	RST® terminals with screw clamping allow the connection of conductors without special preparation (without ferrules) according to EN 60999-1.

general

rated current	20 A
rated voltage	250 V / 400 V
rated impulse voltage	4 kV
strain relief	yes
pollution degree	3
lockable	self-locking (unlocking by tool)
color of coding/ contact carrier	leaves green
marking of poles	1, 2, PE
color of housing inclusive strain relief	black
RAL-Nummer Codierung/Kontakteinsatz	6002

connection data

cable diameter max.	14 mm
cable diameter min.	10 mm
connection cross section solid mm² max.	6 mm²
connection cross section solid mm² min.	0.75 mm²
connection cross section fine stranded mm² max.	6 mm²
connection cross section fine stranded mm² min.	0.75 mm²
terminations per pole	1
connection cross section stranded mm² min.	0.75 mm²
connection cross section stranded mm² max.	6 mm²
sheath strip length	26.5 mm
wire strip length	8 mm

model

model	male
connection type	screw connection
degree of protection (IP)	IP66/68 (3m;2h) /IP69

material

housing material	polyamide
halogen free	yes
contact material	CuZn
fire load	0.272 kWh/St
insulation components continous temperature	100 °C
surface finish	silver-plated

dimensions

length	79.1 mm
width	34.6 mm
height	34.6 mm

accessories

item no.	type	description
05.564.4453.1	cover for male connector SW	RST20i3/2 cover piece, for covering unused male connectors, color black
99.416.6205.2	cover for male connector SW	RST20i3/2 cover piece, for covering unused male connectors, with fastening belt, color black

assembly

item no.	type	description
96.030.0155.7	distributor RST20I3V 3P1 F V H GN0	RST® CLASSIC distributor, parallel connection, with fastening option, number of poles 3, rated voltage 250 V / 400 V, rated current 20 A, number of inputs 1, number of outputs 3, color of coding/ contact carrier leaves green
96.031.5055.7	device connector RST20I3S B1 M01 H GN0	RST® CLASSIC device connector, standard, straight, M25, number of poles 3, model female, connection type screw connection, rated voltage 250 V / 400 V, rated current 20 A, color of coding/ contact carrier leaves green
96.233.1031.7	cable assembly RST20I3K1BS 25 H 10GN0	RST® CLASSIC connecting cable, female - male, number of poles 3, rated voltage 250 V / 400 V, rated current 20 A, cable type H07RN-F, fire class Eca, total length 1 m, nominal cross section conductor 2.5 mm², color of coding/ contact carrier leaves green
96.031.4155.7	connector RST20I3S B1 ZR2SH GN0	RST® CLASSIC connector, straight, number of poles 3, female, connection type screw connection, rated voltage 250 V / 400 V, rated current 20 A, cable diameter 10 - 14 mm, color of coding/ contact carrier leaves green
96.031.6155.7	device connector RST20I3S B1 M03 H GN0	RST® CLASSIC device connector, modular, straight, M16, number of poles 3, model female, connection type screw connection, rated voltage 250 V / 400 V, rated current 20 A, color of coding/ contact carrier leaves green
96.031.6055.7	device connector RST20I3S B1 M00 H GN0	RST® CLASSIC device connector, modular, straight, M20, number of poles 3, model female, connection type screw connection, rated voltage 250 V / 400 V, rated current 20 A, color of coding/ contact carrier leaves green
96.033.6055.7	device connector RST20I3S B1 M90 H GN0	RST® CLASSIC device connector, modular, angled 90°, M20, number of poles 3, model female, connection type screw connection, rated voltage 250 V / 400 V, rated current 20 A, color of coding/ contact carrier leaves green
96.035.6155.7	device connector RST20I3S B1 M13 L GN02	RST20i3 device connector (7° angled) M16, 3 pole, female, screw connection, modular, application 250/400V with PE, 20A, coding color leaf green, color of housing black

technical drawing

These dimensions will be especially checked at delivery
Only inspection dimensions
With /E marked dimensions are only valid for internal use

Diese Maße werden bei Abnahme besonders geprüft
Ausschließlich Prüfmaße
Mit /E gekennzeichnete Maße sind nur für interne Zwecke gültig

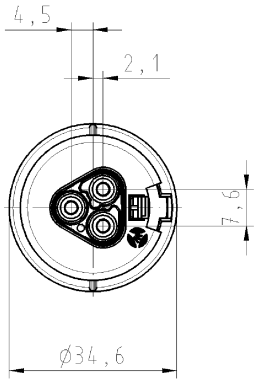

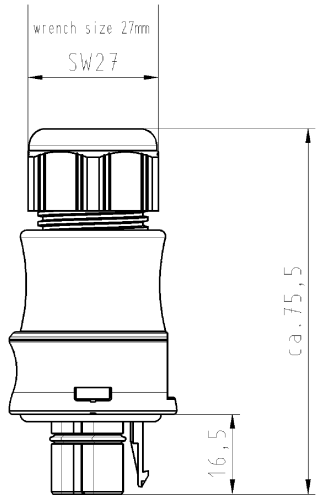

Auslieferungszustand
delivery status

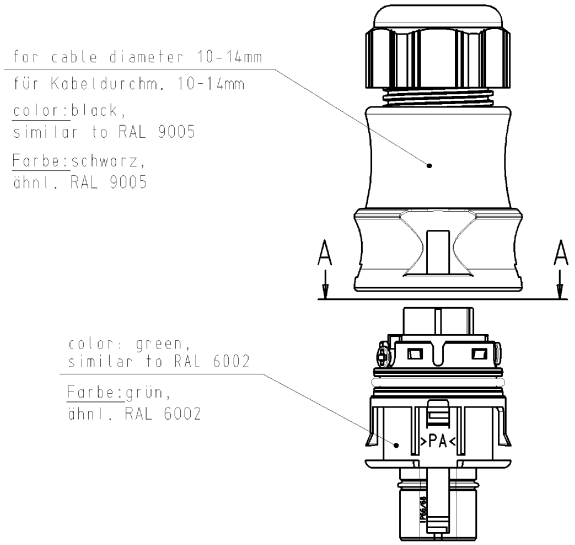

Verpackungseinheit: je 100 Stück
packaging unit: per 100

A-A



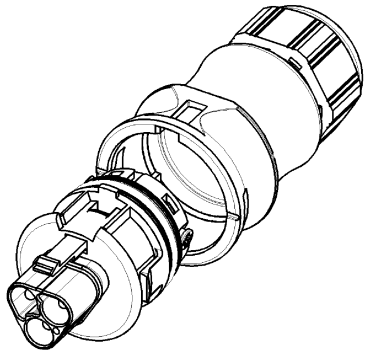

Weitergabe sowie Vervielfältigung dieses Dokuments, Verwertung und Mitteilung seines Inhalts sind verboten, soweit nicht ausdrücklich gestattet.
The reproduction, distribution and utilization of this document as well as the communication of its contents to others without express authorization is prohibited.

Type: RST20I3S S1 ZR2SVH GN02

Tolerierung nach DIN 7167/Tolerance system acc. to DIN 7167. [This DIN-standard desbribes the envelope principle. According to the envelope principle the deviations of form and parallelism are limited by the size tolerances].				nein/no ☒ Stoffverbots- und Deklarationsliste nach UU-TQM-05/03 ist einzuhalten. Conformity with Wieland document UU-TQM-05/03 [list of prohibited / declarable hazardous substances] to be declared!			
Freitoleranz nach General tolerance		CAD - Zeichnung, keine manuellen Änderungen CAD - drawing, no manual modifications allowed		1.Verwendung: First Use: -		Blatt: Sheet: 1 von of 1	
/	Werkstoff/Material	2005	Tag/Date	Name	Zeichnung Nr./Drawing No.		Index
/		gezeichnet drawn	04.11.	Kneitz	96.032.4155.7 01K		
/	Maßstab/Scale 1:1	geprüft checked	-	-			
/		Normgepr. Stand. check	-	-	Maße in mm/Dimensions are in mm		
/	Vol. mm³ Ofl./Surf. mm²	Ersatz für/Replacement for: -					
/	wieland Elektrische Verbindungen	Type	Benennung/Title				
Index / Datum / Blatt Date / Sheet			STECKERTEIL_MIT_ZUGENTLASTUNG				
Änderung/Revision			male connector with cord grip Schraubanschluss ohne Drahtschutz für 400V screw-connection without wire protection for 400V				

96032415570 1K_4 CADW1019 Kneitz 2005-11-04T10:32:30 1.000

QU-PEM-08/91