product data sheet

item no. 96.031.4155.7

connector RST20I3S B1 ZR2SH GN0

RST® CLASSIC connector, straight, number of poles 3, female, connection type screw connection, rated voltage 250 V / 400 V, rated current 20 A, cable diameter 10 - 14 mm, color of coding/ contact carrier leaves green



item no.	96.031.4155.7
EAN	4015573875142
order unit	100 piece(s)

certificates / approvals

technical data

note

note	RST® terminals with screw clamping allow the connection of conductors without special preparation (without ferrules) according to EN 60999-1.

general

rated current	20 A
rated voltage	250 V / 400 V
rated impulse voltage	4 kV
strain relief	yes
pollution degree	3
lockable	self-locking (unlocking by tool)
color of coding/ contact carrier	leaves green
Pole codification	1, 2, PE
color of housing inclusive strain relief	black
RAL-Nummer Codierung/Kontakteinsatz	6002

connection data

cable diameter max.	14 mm
cable diameter min.	10 mm
connection cross section solid mm² max.	6 mm²
connection cross section solid mm² min.	0.75 mm²
connection cross section fine stranded mm² max.	6 mm²
connection cross section fine stranded mm² min.	0.75 mm²
terminations per pole	1
connection cross section stranded mm² min.	0.75 mm²
connection cross section stranded mm² max.	6 mm²
sheath strip length	26.5 mm
wire strip length	8 mm

model

model	female
connection type	screw connection

degree of protection (IP)	IP66/68 (3m;2h) /IP69

material

housing material	polyamide
halogen free	yes
contact material	CuZn
fire load	0.29 kWh/St
insulation components continous temperature	100 °C
surface finish	silver-plated

dimensions

length	82 mm
width	34.6 mm
height	34.6 mm

accessories

item no.	type	description
99.414.6205.2	cover for female connector SW	RST20i3/2 cover piece, for covering unused female connectors, with fastening belt, color black
Z5.564.4553.1	cover for female connector SW	RST20i3/2 cover piece, for covering unused female connectors, color black

assembly

item no.	type	description
96.030.0155.7	distributor RST20I3V 3P1 F V H GN0	RST® CLASSIC distribution block 1I / 3O, rated voltage 250 V / 400 V, rated current 20 A, number of poles 3, degree of protection (ip) IP66/68 (3m 2h) /IP69, number of inputs 1, number of outputs 3, pole codification 1, 2, PE, color of coding/ contact carrier leaves green, ral number coding/contact
96.032.5055.7	device connector RST20I3S S1 M01VH GN0	RST® CLASSIC device connector, standard, straight, M25, number of poles 3, model male, connection type screw connection, rated voltage 250 V / 400 V, rated current 20 A, color of coding/ contact carrier leaves green
96.233.1031.7	cable assembly RST20I3K1BS 25 H 10GN0	RST® CLASSIC connecting cable, female - male, number of poles 3, rated voltage 250 V / 400 V, rated current 20 A, cable type H07RN-F, fire class Eca, total length 1 m, nominal cross section conductor 2.5 mm², color of coding/ contact carrier leaves green
96.032.6155.7	device connector RST20I3S S1 M03VH GN0	RST® CLASSIC device connector, modular, straight, M16, number of poles 3, model male, connection type screw connection, rated voltage 250 V / 400 V, rated current 20 A, color of coding/ contact carrier leaves green
96.032.6055.7	device connector RST20I3S S1 M00VH GN0	RST® CLASSIC device connector, modular, straight, M20, number of poles 3, model male, connection type screw connection, rated voltage 250 V / 400 V, rated current 20 A, color of coding/ contact carrier leaves green
96.034.6055.7	device connector RST20I3S S1 M90VH GN0	RST® CLASSIC device connector, modular, angled 90°, M20, number of poles 3, model male, connection type screw connection, rated voltage 250 V / 400 V, rated current 20 A, color of coding/ contact carrier leaves green
96.036.6155.7	device connector RST20I3S B1 M13 L GN02	RST20i3 device connector (7° angled) M16, 3 pole, male, screw connection, modular, application 250/400V with PE, 20A, coding color leaf green, color of housing black

technical drawing

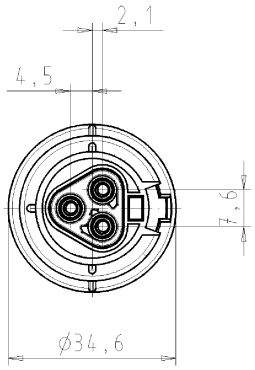

These dimensions will be especially checked at delivery
Only inspection dimensions
With Æ marked dimensions are only valid for internal use

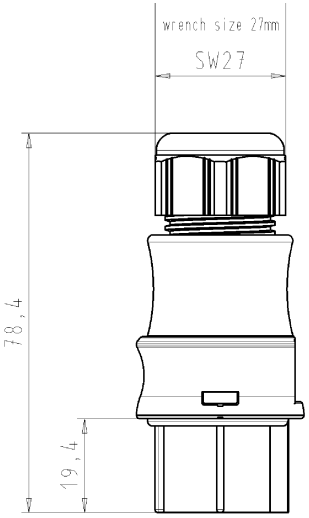

Diese Maße werden bei Abnahme besonders geprüft
Ausschließlich Prüfmaße
Mit Æ gekennzeichnete Maße sind nur für interne Zwecke gültig

Auslieferungszustand
delivery status

for cable diameter 10-14mm
für Kabeldurchm. 10-14mm
Farbe: schwarz,
ähnl. RAL 9005
color: black,
similar to RAL 9005

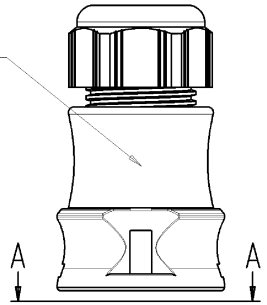

color: green,
similar to RAL 6002
Farbe: grün,
ähnl. RAL 6002

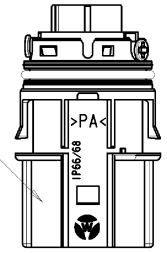

Verpackungseinheit: je 100 Stück
packaging unit: per 100

A-A



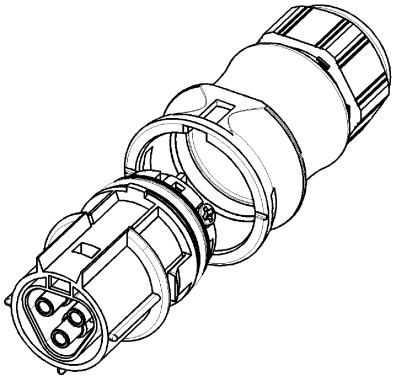

Type: RST2013S B1 ZR2S H GN02

Weitergabe sowie Vervielfältigung dieses Dokuments, Verwertung und Mitteilung seines Inhalts sind verboten, soweit nicht ausdrücklich gestattet. The reproduction of this document and utilization of the documents as well as the communication of its contents to others without express authorization is prohibited.

Tolerierung nach DIN 7167/Tolerance system acc. to DIN 7167.
(This DIN-standard desbribes the envelope principle. According to the envelope principle the deviations of form and parallelism are limited by the size tolerances).

nein/no ☒ Stoffverbots- und Deklarationsliste nach VU-TGM-05/03 ist einzuhalten. Conformity with Wieland document VU-TGM-05/03 (list of prohibited / declarable hazardous substances) to be declared!

Freitoleranz nach
General tolerance

CAD - Zeichnung, keine manuellen Änderungen
CAD - drawing, no manual modifications allowed

1.Verwendung:
First Use: -

Blatt: 1 von 1
Sheet: 1 of 1

			Werkstoff/Material	2005	Tag/Date	Name	Zeichnung Nr./Drawing No. 96.031.4155.7 01K Index
				gezeichnet drawn	02.11.	Kneitz	
			Maßstab/Scale 1:1	geprüft checked	-	-	
				Normgeprüft Stand. check	-	-	Maße in mm/Dimensions are in mm
			Vol. mm³ Oft./Surf. mm²	Ersatz für/Replacement for: -			
			wieland Elektrische Verbindungen	Type	Benennung/Title BUCHSENTEIL_MIT_ZUGENTLASTUNG female connector with cord grip Schraubanschluss ohne Drahtschutz für 400V screw connection without wire protection for 400V		
Index	Datum / Blatt Date / Sheet						
Änderung/Revision							

OU-PEM-08/91

960314-55701K_4 CADW1019 Kneitz 2005-11-02T11:53:35 1.000