product data sheet

item no. 96.032.4055.7

# connector RST20I3S S1 ZR1 VH GN02

RST® CLASSIC connector, straight, number of poles 3, male, connection type screw connection, rated voltage 250 V / 400 V, rated current 20 A, cable diameter 6 - 10 mm, color of coding/ contact carrier leaves green



| | |
|---|---|
| item no. | 96.032.4055.7 |
| EAN | 4015573875104 |
| order unit | 100 piece(s) |

## certificates / approvals

## technical data

**note**

| | |
|---|---|
| note | RST® terminals with screw clamping allow the connection of conductors without special preparation (without ferrules) according to EN 60999-1. |

**general**

| | |
|---|---|
| rated current | 20 A |
| rated voltage | 250 V / 400 V |
| rated impulse voltage | 4 kV |
| strain relief | yes |
| pollution degree | 3 |
| lockable | self-locking (unlocking by tool) |
| color of coding/ contact carrier | leaves green |
| marking of poles | 1, 2, PE |
| color of housing inclusive strain relief | black |
| RAL-Nummer Codierung/Kontakteinsatz | 6002 |

**connection data**

| | |
|---|---|
| cable diameter max. | 10 mm |
| cable diameter min. | 6 mm |
| connection cross section solid mm² max. | 6 mm² |
| connection cross section solid mm² min. | 0.75 mm² |
| connection cross section fine stranded mm² max. | 6 mm² |
| connection cross section fine stranded mm² min. | 0.75 mm² |
| terminations per pole | 1 |
| connection cross section stranded mm² min. | 0.75 mm² |
| connection cross section stranded mm² max. | 6 mm² |
| sheath strip length | 26.5 mm |
| wire strip length | 8 mm |

**model**

| | |
|---|---|
| model | male |
| connection type | screw connection |
| degree of protection (IP) | IP66/68 (3m;2h) /IP69 |

**material**

| | |
|---|---|
| housing material | polyamide |
| halogen free | yes |
| contact material | CuZn |
| fire load | 0.272 kWh/St |
| insulation components continous temperature | 100 °C |
| surface finish | silver-plated |

**dimensions**

| | |
|---|---|
| length | 79.1 mm |
| width | 34.6 mm |
| height | 34.6 mm |

## accessories

| item no. | type | description |
|---|---|---|
| 05.564.4453.1 | cover for male connector SW | RST20i3/2 cover piece, for covering unused male connectors, color black |
| 99.416.6205.2 | cover for male connector SW | RST20i3/2 cover piece, for covering unused male connectors, with fastening belt, color black |

## assembly

| item no. | type | description |
|---|---|---|
| 96.030.0155.7 | distributor RST20I3V 3P1 F V H GN0 | RST® CLASSIC distributor, parallel connection, with fastening option, number of poles 3, rated voltage 250 V / 400 V, rated current 20 A, number of inputs 1, number of outputs 3, color of coding/ contact carrier leaves green |
| 96.031.5055.7 | device connector RST20I3S B1 M01 H GN0 | RST® CLASSIC device connector, standard, straight, M25, number of poles 3, model female, connection type screw connection, rated voltage 250 V / 400 V, rated current 20 A, color of coding/ contact carrier leaves green |
| 96.233.1031.7 | cable assembly RST20I3K1BS 25 H 10GN0 | RST® CLASSIC connecting cable, female - male, number of poles 3, rated voltage 250 V / 400 V, rated current 20 A, cable type H07RN-F, fire class Eca, total length 1 m, nominal cross section conductor 2.5 mm², color of coding/ contact carrier leaves green |
| 96.031.4055.7 | connector RST20I3S B1 ZR1SH GN02 | RST® CLASSIC connector, straight, number of poles 3, female, connection type screw connection, rated voltage 250 V / 400 V, rated current 20 A, cable diameter 6 - 10 mm, color of coding/ contact carrier leaves green |
| 96.031.6155.7 | device connector RST20I3S B1 M03 H GN0 | RST® CLASSIC device connector, modular, straight, M16, number of poles 3, model female, connection type screw connection, rated voltage 250 V / 400 V, rated current 20 A, color of coding/ contact carrier leaves green |
| 96.031.6055.7 | device connector RST20I3S B1 M00 H GN0 | RST® CLASSIC device connector, modular, straight, M20, number of poles 3, model female, connection type screw connection, rated voltage 250 V / 400 V, rated current 20 A, color of coding/ contact carrier leaves green |
| 96.033.6055.7 | device connector RST20I3S B1 M90 H GN0 | RST® CLASSIC device connector, modular, angled 90°, M20, number of poles 3, model female, connection type screw connection, rated voltage 250 V / 400 V, rated current 20 A, color of coding/ contact carrier leaves green |
| 96.035.6155.7 | device connector RST20I3S B1 M13 L GN02 | RST20i3 device connector (7° angled) M16, 3 pole, female, screw connection, modular, application 250/400V with PE, 20A, coding color leaf green, color of housing black |

technical drawing

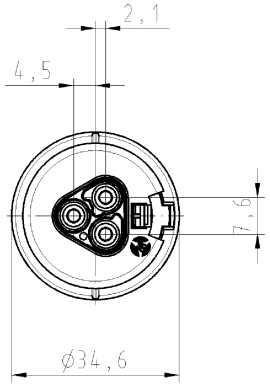


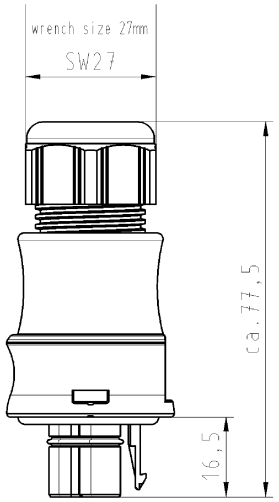


## Auslieferungszustand
## delivery status

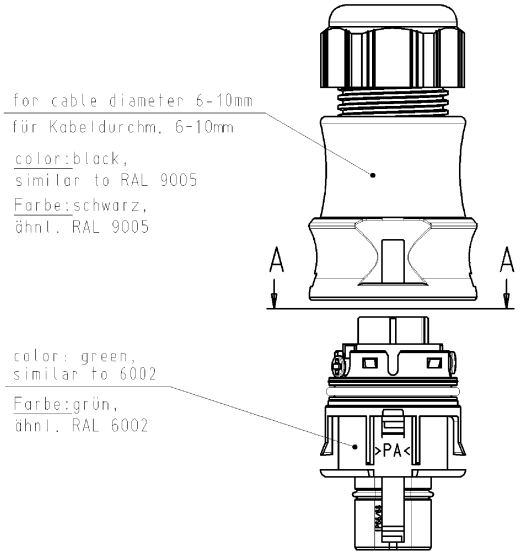


Verpackungseinheit: je 100 Stück
packaging unit: per 100

A-A



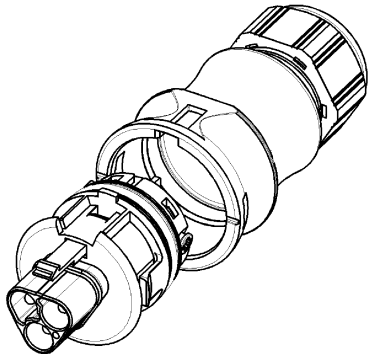

Type: RST2013S S1 ZR1SVH GN02

Weitergabe sowie Vervielfältigung dieses Dokuments, Verwertung und Mitteilung seines Inhalts sind verboten, soweit nicht ausdrücklich gestattet. The reproduction, distribution and utilization of this document as well as the communication of its contents to others without express authorization is prohibited.

These dimensions will be especially checked at delivery
Only inspection dimensions
With Æ marked dimensions are only valid for internal use

Diese Maße werden bei Abnahme besonders geprüft
Ausschließlich Prüfmaße
Mit Æ gekennzeichnete Maße sind nur für interne Zwecke gültig

Toleranzierung nach DIN 7167/Tolerance system acc. to DIN 7167.
(This DIN-standard desbribes the envelope principle. According to the envelope principle the deviations of form and parallelism are limited by the size tolerances).

nein/no ☒ Stoffverbots- und Deklarationsliste nach VU-TGM-05/03 ist einzuhalten. Conformity with Wieland document VU-TGM-05/03 (list of prohibited / declarable hazardous substances) to be declared!

Freitoleranz nach / General tolerance

CAD - Zeichnung, keine manuellen Änderungen / CAD - drawing, no manual modifications allowed

1. Verwendung: - / First Use: -

Blatt/Sheet: 1 von/of 1

Werkstoff/Material

Maßstab/Scale: 1:1

| | Tag/Date | Name |
|---|---|---|
| 2005 | | |
| gezeichnet/drawn | 03.11. | Kneitz |
| geprüft/checked | - | - |
| Normgep. Stand./check | - | - |

Vol. mm³ Oft./Surf. mm²

Ersatz für/Replacement for: -

Zeichnung Nr./Drawing No.: 96.032.4055.7 01K

Index

Maße in mm/Dimensions are in mm

Index / Datum / Blatt / Date / Sheet / Änderung/Revision

wieland
Elektrische Verbindungen

Type

Benennung/Title

STECKERTEIL_MIT_ZUGENTLASTUNG

male connector with cord grip
Schraubanschluss ohne Drahtschutz für 400V
screw-connection without wire protection for 400V

OU-PEM-08/91

9603240557 01K_4 CADW1019 Kneitz 2005-11-03T14:46:02 1.000