product data sheet

item no. 96.031.0055.7

connector RST20I3F B2 ZR1SH GN0

RST® CLASSIC connector, straight, number of poles 3, female, connection type spring clamp connection, rated voltage 250 V / 400 V, rated current 20 A, cable diameter 6 - 10 mm, color of coding/ contact carrier leaves green



item no.	96.031.0055.7
EAN	4015573875067
order unit	100 piece(s)

certificates / approvals

technical data

note

note	fine stranded and stranded conductors require cable end sleeve

general

rated current	20 A
rated voltage	250 V / 400 V
rated impulse voltage	4 kV
strain relief	yes
pollution degree	3
lockable	self-locking (unlocking by tool)
color of coding/ contact carrier	leaves green
Pole codification	1, 2, PE
color of housing inclusive strain relief	black
RAL-Nummer Codierung/Kontakteinsatz	6002

connection data

cable diameter max.	10 mm
cable diameter min.	6 mm
connection cross section solid mm² max.	2.5 mm²
connection cross section solid mm² min.	0.5 mm²
connection cross section fine stranded mm² max.	1.5 mm²
connection cross section fine stranded mm² min.	0.5 mm²
terminations per pole	2
connection cross section stranded mm² min.	0.75 mm²
connection cross section stranded mm² max.	1.5 mm²
sheath strip length	35 mm
wire strip length	14.5 mm

model

model	female
connection type	spring clamp connection

degree of protection (IP)	IP66/68 (3m;2h) /IP69

material

housing material	polyamide
halogen free	yes
contact material	CuZn
fire load	0.29 kWh/St
insulation components continous temperature	100 °C
surface finish	silver-plated

dimensions

length	82 mm
width	34.6 mm
height	34.6 mm

accessories

item no.	type	description
99.414.6205.2	cover for female connector SW	RST20i3/2 cover piece, for covering unused female connectors, with fastening belt, color black
Z5.564.4553.1	cover for female connector SW	RST20i3/2 cover piece, for covering unused female connectors, color black
06.502.4300.0	screwdriver DIN 5264 A 0,4 X 2,5	Screw driver according to DIN 5264 A, blade: 0.4x2.5 mm, long and straight version
95.101.1300.0	ferrule crimping tool 0,08 - 10 mm²	Crimping tool for ferrules, wire strip length: 7-28 mm, nominal cross section: 0,08-10 mm², length of tool: 180 mm
06.600.3627.0	ferrule DIN 46228-E1-12	RST ferrule, for spring clamp contact, with insulating sleeve, for cross section 1.0 mm²/AWG17
06.600.3727.0	ferrule DIN 46228-E0,75-12	RST ferrule, for spring clamp contact, with insulating sleeve, for cross section 0.75-1.0 mm²/AWG17
06.600.3827.0	ferrule DIN 46228-E0,5-10	RST ferrule, for spring clamp contact, with insulating sleeve, for cross section 0.5 mm²/AWG20
06.600.3927.0	ferrule DIN 46228-E1,5-12	RST ferrule, for spring clamp contact, with insulating sleeve, for cross section 1.5 mm²/AWG16

assembly

item no.	type	description
96.030.0155.7	distributor RST20I3V 3P1 F V H GN0	RST® CLASSIC distribution block 1I / 3O, rated voltage 250 V / 400 V, rated current 20 A, number of poles 3, degree of protection (ip) IP66/68 (3m 2h) /IP69, number of inputs 1, number of outputs 3, pole codification 1, 2, PE, color of coding/ contact carrier leaves green, ral number coding/contact
96.032.1055.7	device connector RST20I3F S2 M01VH GN0	RST® CLASSIC device connector, standard, straight, M25, number of poles 3, model male, connection type spring clamp connection, rated voltage 250 V / 400 V, rated current 20 A, color of coding/ contact carrier leaves green
96.233.1031.7	cable assembly RST20I3K1BS 25 H 10GN0	RST® CLASSIC connecting cable, female - male, number of poles 3, rated voltage 250 V / 400 V, rated current 20 A, cable type H07RN-F, fire class Eca, total length 1 m, nominal cross section conductor 2.5 mm², color of coding/ contact carrier leaves green
96.032.2155.7	device connector RST20I3F S2 M03VH GN0	RST® CLASSIC device connector, modular, straight, M16, number of poles 3, model male, connection type spring clamp connection, rated voltage 250 V / 400 V, rated current 20 A, color of coding/ contact carrier leaves green
96.032.2055.7	device connector RST20I3F S2 M00VH GN0	RST® CLASSIC device connector, modular, straight, M20, number of poles 3, model male, connection type spring clamp connection, rated voltage 250 V / 400 V, rated current 20 A, color of coding/ contact carrier leaves green
96.034.2055.7	device connector RST20I3F S2 M90VH GN0	RST® CLASSIC device connector, modular, angled 90°, M20, number of poles 3, model male, connection type spring clamp connection, rated voltage 250 V / 400 V, rated current 20 A, color of coding/ contact carrier leaves green
96.036.2155.7	device connector RST20I3F B2 M13 L GN02	RST20i3 device connector (7° angled) M16, 3 pole, male, spring clamp connection, modular, application 250/400V with PE, 20A, coding color leaf green, color of housing black

technical drawing

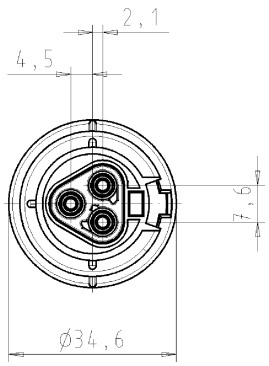

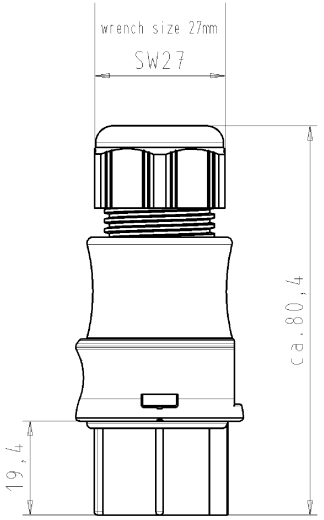

These dimensions will be especially checked at delivery
Only inspection dimensions
With Æ marked dimensions are only valid for internal use

Diese Maße werden bei Abnahme besonders geprüft
Ausschließlich Prüfmaße
Mit Æ gekennzeichnete Maße sind nur für interne Zwecke gültig

Auslieferungszustand
delivery status

for cable diameter 6-10mm
für Kabeldurchm. 6-10mm
color: black,
similar to RAL 9005
Farbe: schwarz,
ähnl. RAL 9005

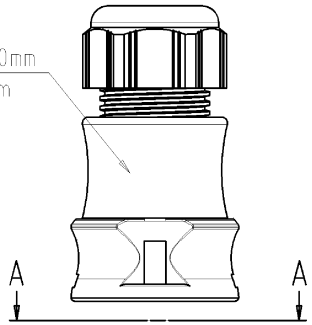

color: green,
similar to RAL 6002
Farbe: grün,
ähnl. RAL 6002

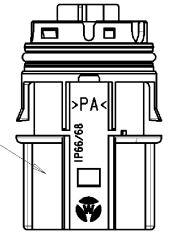

Verpackungseinheit: je 100 Stück
packaging unit: per 100

A-A



Weitergabe sowie Vervielfältigung dieses Dokuments, Verwertung und Mitteilung seines Inhalts sind verboten, soweit nicht ausdrücklich gestattet. The reproduction, distribution and utilization of this document as well as the communication of its contents to others without express authorization is prohibited.

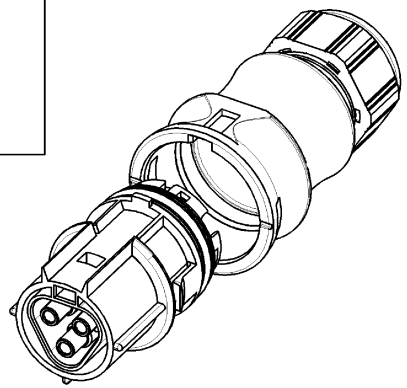

Type: RST2013F B2 ZR1S H GN02

Tolerierung nach DIN 7167/Tolerance system acc. to DIN 7167.
[This DIN-standard desbribes the envelope principle. According to the envelope principle the deviations of form and parallelism are limited by the size tolerances].

nein/no ☒ Stoffverbots- und Deklarationsliste nach UU-TGM-05/03 ist einzuhalten. Conformity with Wieland document UU-TGM-05/03 [list of prohibited / declarable hazardous substances] to be declared!

Freitoleranz nach / General tolerance

CAD - Zeichnung, keine manuellen Änderungen / CAD - drawing, no manual modifications allowed

1.Verwendung: - / First Use:

Blatt: 1 von 1 / Sheet: 1 of 1

	/	Werkstoff/Material	2005	Tag/Date	Name	Zeichnung Nr./Drawing No.	Index
	/		gezeichnet / drawn	02.11.	Kneitz	T 96.031.0055.7 01K	
	/	Maßstab/Scale 1:1	geprüft / checked	-	-		
	/		Normgeprüft / Stand. check	-	-	Maße in mm/Dimensions are in mm	
	/	Vol. mm³	Oft./Surf. mm²	Ersatz für/Replacement for: -			
	/	wieland Elektrische Verbindungen	Type	Benennung/Title: BUCHSENTEIL_MIT_ZUGENTLASTUNG female connector with cord grip Federkraftanschluss für 400V/spring-clamp-connection for 400V			
Index	Datum / Blatt / Date / Sheet						
Änderung/Revision							

OU-PEM-08/91

96031005570IK_4 G4DW1019 Kneitz 2005-11-02T01:14:06 1.000