product data sheet

item no. 96.223.6092.4

cable assembly RST20I2K1BS325OL 60BR0

RST® CLASSIC connecting cable, female - male, number of poles 2, rated voltage 50 V / 120 V, rated current 20 A, cable type Ölflex® Classic 110, total length 6 m, nominal cross section conductor 2.5 mm², color of coding/ contact carrier signal brown

item no.	96.223.6092.4
EAN	4015573966048
order unit	15 piece(s)

certificates / approvals

technical data

note

note	The total length may vary up to + / - 3 %.

general

rated current	20 A
rated voltage	50 V / 120 V
rated impulse voltage	4 kV
pollution degree	3
continuity resistor	42.14 mOhm
lockable	self-locking (unlocking by tool)
color of coding/ contact carrier	signal brown
Pole codification	1, 2
color of housing inclusive strain relief	black

model

type of construction	shrinkage tube
connection type	crimp
nominal cross section conductor	2.5 mm²
degree of protection (IP)	IP66/68 (3m;2h)
cable type	Ölflex® Classic 110
cable color	grey
cable diameter min.	8.5 mm
cable diameter max.	9.4 mm
version of cable	female - male
type of cord set	connecting cable
version cable end 1	female

version cable end 2	male
shielded	no

material

surface finish	silver-plated
halogen free	no
continuous temperature of cable	70 °C
insulation components continous temperature	100 °C
fire load	2.963 kWh/St

dimensions

total length	6 m

technical drawing

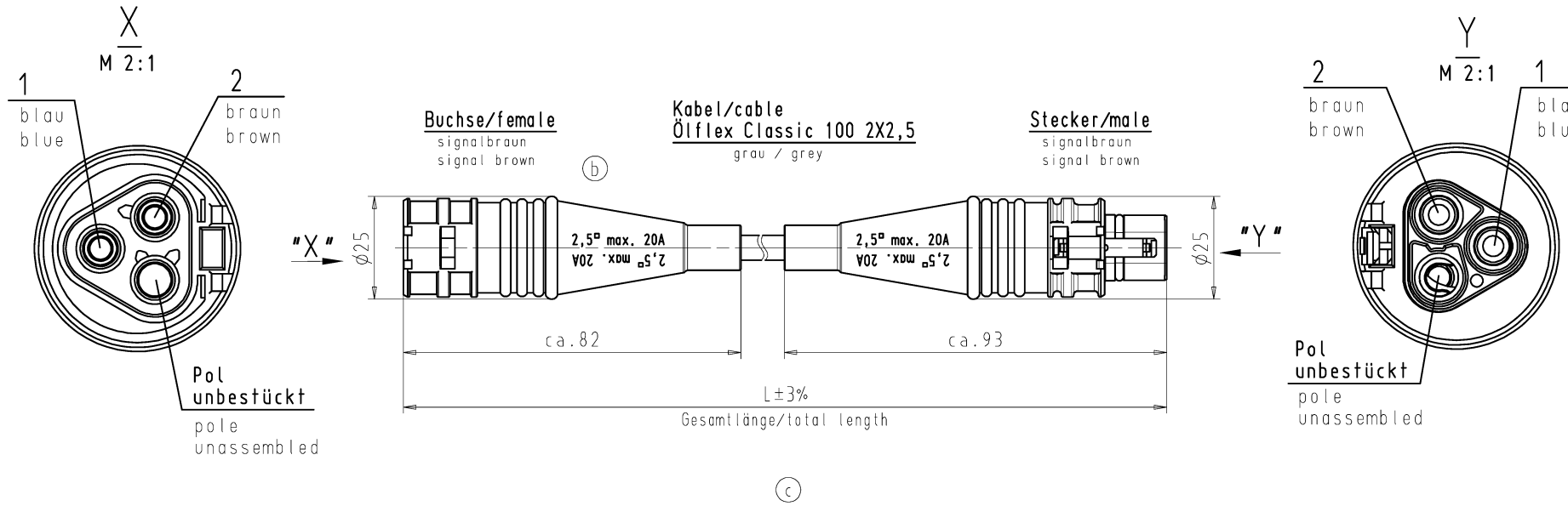

These dimensions will be especially checked at delivery

Only inspection dimensions

With /E marked dimensions are only valid for internal use

Diese Maße werden bei Abnahme besonders geprüft

Ausschließlich Prüfmaße

Mit /E gekennzeichnete Maße sind nur für interne Zwecke gültig

Teile-Nr. part-no.	L	Beispiel (Farbe: signalbraun) exampel (colour: signalbrown)	Typ type
96.223.XX92.4	XX in dm-Schritten	96.223.1092.4 = 10dm/L= 1000mm	RST2012K1BS3250L 10BR01
U6.223.XX92.4	XX in m-Schritten	U6.223.1292.4 = 12 m/L=12000mm	RST2012K1BS3250LX12BR01

Weitere Daten siehe KATALOG oder eKatalog.
Additional data see CATALOG or eCatalog.

www.wieland-electric.com
eshop.wieland-electric.com

Tolerierung Size ISO 14405Ⓔ/Tolerance system Size ISO 14405Ⓔ.
(This ISO-standard describes the envelope principle. According to the envelope principle the deviations of form and parallelism are limited by the size tolerances).

ja/yes ☒ Stoffverbots- und Deklarationsliste nach WN 5020.010 ist einzuhalten.
Conformity with Wieland document WN 5020.010 e (list of prohibited / declarable hazardous substances) to be declared!

Freitaleranz nach
General tolerance

CAD - Zeichnung, keine manuellen Änderungen
CAD - drawing, no manual modifications allowed

1.Verwendung: -
First Use:

Blatt: 1 von 1
Sheet: of

				2007	Tag/Date	Name
	/		Werkstoff/Material	gezeichnet drawn	30.03.	Kneitz
	/			geprüft checked	-	-
	/	Maßstab/Scale		Normgepr. Stand. check	-	-
	/	%				

Zeichnung Nr./Drawing No.: T 96.223.0492.4 01K — Index: c

Maße in mm/Dimensions are in mm

Index	Datum / Blatt Date / Sheet	Änderung/Revision
c	26.05.2015/	Vol. mm³ Ofl./Surf. mm² Ersatz für/Replacement for: 96.223.0482.4 01K von 19.03.2007 ⓐ
b	01.02.2008/	
a	30.03.2007/	

wieland
www.wieland-electric.com

Type

Benennung/Title

KONFEKT_LEITUNG

Buchse-Stecker Crimpausführung/female-male
pre-assembled cable crimp design K1 50V

Weitergabe sowie Vervielfältigung dieses Dokuments, Verwertung und Mitteilung seines Inhalts sind verboten, soweit nicht ausdrücklich gestattet. Zuwiderhandlungen verpflichten zu Schadensersatz. The reproduction, distribution and utilization of this document as well as the communication of its contents to others without express authorization is prohibited.