product data sheet

item no. 92.257.1004.1

cable assembly GST18I5KS-S 15 10SW

gesis® CLASSIC connection cable, male - free end, number of poles 5, rated voltage 250 V / 400 V, rated current 16 A, cable type H05VV-F, fire class Eca, total length 1 m, nominal cross section conductor 1.5 mm², color of coding/ contact carrier black

item no.	92.257.1004.1
EAN	4015573588066
order unit	30 piece(s)

certificates / approvals

technical data

general

rated current	16 A
rated voltage	250 V / 400 V
rated impulse voltage	4 kV
pollution degree	2
mechanical coding	code 1
continuity resistor	11.8 mOhm
lockable	self-locking (unlocking by tool)
color of coding/ contact carrier	black
Pole codification	3, N, PE, 2, 1
color of housing inclusive strain relief	black

model

nominal cross section conductor	1.5 mm²
degree of protection (IP)	IP40
wire strip length	9 mm
sheath strip length	35 mm
preparation of conductor ends	ultrasonically compressed wire ends
cable type	H05VV-F
cable color	black
cable diameter max.	10.1 mm
version of cable	male - free end
type of cord set	connection cable
version cable end 1	free end
version cable end 2	GST18i5 plug

material

surface finish	tin-plated
halogen free	no
continuous temperature of cable	70 °C
insulation components continous temperature	100 °C
fire load	0.75 kWh/St
fire class	Eca

dimensions

total length	1 m

accessories

item no.	type	description
05.587.3156.0	lock (G)ST18 WS	Locking device for cable to cable connection GST18i3-5, white
05.587.3156.1	lock (G)ST18 SW	Locking device for cable to cable connection GST18i3-5, black
05.564.5353.0	cover cap GST18I3/4/5 SW	Cover piece 12 pole black for female parts GST18i3-6
05.564.5353.2	cover cap GST18I3/4/5 WS	Cover piece 12 pole white for female parts GST18i3-6
05.566.9253.0	cover cap GST18I5 BUCHSEN	Cover for female connectors GST18i5, black

technical drawing

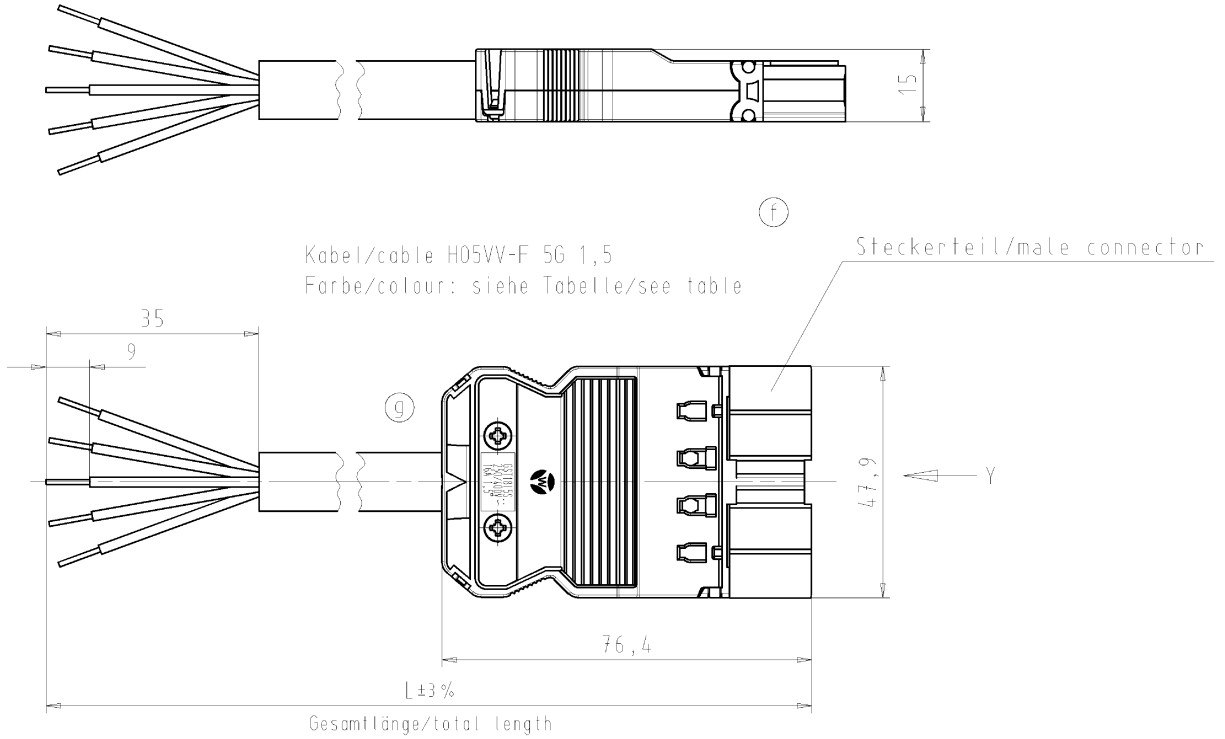

These dimensions will be especially checked at delivery
Only inspection dimensions
With /E marked dimensions are only valid for internal use

Diese Maße werden bei Abnahme besonders geprüft
Ausschließlich Prüfmaße
Mit /E gekennzeichnete Maße sind nur für interne Zwecke gültig

Weitergabe sowie Vervielfältigung dieses Dokuments, Verwertung und Mitteilung seines Inhalts sind verboten, soweit nicht ausdrücklich gestattet.
The reproduction, distribution and utilization of this document as well as the communication of its contents to others without express authorization is prohibited.

Typ/type: GST18I5KS-S 15 .. SW = schwarz/black
WS = weiß/white

.F	Farbe colour	Codierung "Y" Stecker male	Kabelfarbe cable colour
.1	schwarz black	1 2 PE N 3	schwarz black
.2	weiß white		weiß white

f

Teile-Nr. part-no.	L	Beispiel (Farbe: schwarz) exampel (colour: black)	Typ type
92.257.XX04.F	XX in dm-Schritten	92.257.1004.1 = 10dm/L= 1000mm	GST18I5KS-S 15 10SW
U2.257.XX04.F	XX in m-Schritten	U2.257.1204.1 = 12 m/L=12000mm	GST18I5KS-S 15 X12SW

Tolerierung nach DIN 7167/Tolerance system acc. to DIN 7167.
(This DIN-standard desbribes the envelope principle. According to the envelope principle the deviations of form and parallelism are limited by the size tolerances).

ja/yes ☒ Stoffverbots- und Deklarationsliste nach UU-TOM-05/03 ist einzuhalten. Conformity with Wieland document UU-TOM-05/03 (list of prohibited / declarable hazardous substances) to be declared!

Freitoleranz nach General tolerance

CAD - Zeichnung, keine manuellen Änderungen
CAD - drawing, no manual modifications allowed

1.Verwendung: First Use: -

Blatt: Sheet: 1 von of 1

	/	Werkstoff/Material	2004	Tag/Date	Name	T	Zeichnung Nr./Drawing No.	Index
	/		gezeichnet drawn	17.05.	Schmitt J.		92.257.0504.1 01K	g
	/	Maßstab/Scale	geprüft checked	-	-			
	/	%	Normgepr. Stand. check	-	-		Maße in mm/Dimensions are in mm	
	/	Vol. mm³ Ofl./Surf. mm²	Ersatz für/Replacement for: -					
g	01.02.2012/	wieland Elektrische Verbindungen	Type	Benennung/Title	PRE-ASSEMBLED CABLE KONFEKT_LEITUNG			
f	02.03.2007/				Stecker/male - freies Ende/free end			
Index	Datum / Blatt Date / Sheet				Schraubanschluß/screw connection 250/400V 1,5qmm			
Änderung/Revision								

Weitere Daten siehe Katalog
further data see catalog

92257C0504101K_2 CADM2037 duetsch 2012-02-02T09:22:48 1.000

OU-PEM-08/91