wieland

product data sheet

item no. 92.953.3053.1

connector GST18I5S B1BZR1 SW

Connector GST18i5, 5 pole, female, screw connection, 250/400 V, 20 A, colour of coding: black, colour of housing: black

item no.	92.953.3053.1
EAN	4015573538757
order unit	50 piece(s)

certificates / approvals

technical data

general

rated current	20 A
rated voltage	250 V / 400 V
rated impulse voltage	4 kV
strain relief	yes
pollution degree	2
mechanical coding	code 1
lockable	self-locking (unlocking by tool)
color of coding/ contact carrier	black
marking of poles	3, N, PE, 2, 1
color of housing inclusive strain relief	black

connection data

cable diameter max.	13.5 mm
cable diameter min.	9.5 mm
connection cross section solid mm² max.	2.5 mm²
connection cross section solid mm² min.	0.75 mm²
connection cross section fine stranded mm² max.	2.5 mm²
connection cross section fine stranded mm² min.	0.75 mm²
terminations per pole	1
sheath strip length	46 mm
wire strip length	9 mm

model

model	female
connection type	screw connection
degree of protection (IP)	IP40

material

housing material	polyamide
halogen free	yes
contact material	CuZn
fire load	0 kWh
insulation components continous temperature	100 °C
surface finish	silver-plated

dimensions

length	75 mm

width	47.7 mm
height	17 mm

accessories

item no.	type	description
05.587.3156.0	lock (G)ST18 WS	Locking device for cable to cable connection GST18i3-5, white
05.587.3156.1	lock (G)ST18 SW	Locking device for cable to cable connection GST18i3-5, black
05.564.5353.0	cover cap GST18I3/4/5 SW	Cover piece 12 pole black for female parts GST18i3-6
05.564.5353.2	cover cap GST18I3/4/5 WS	Cover piece 12 pole white for female parts GST18i3-6
05.566.9253.0	cover cap GST18I5 BUCHSEN	Cover for female connectors GST18i5, black

assembly

item no.	type	description
92.054.0058.1	device connector GST18I5L S1H SW	GST18i5 Device connector, solder connector, horizontal, without fastening flange, number of poles 5, model male, connection type Soldering connection, rated voltage 250 V / 400 V, rated current 20 A, color of coding/ contact carrier black
92.257.1000.1	cable assembly GST18I5KSBS 15 10SW	GST18i5 connecting cable, female - male, number of poles 5, rated voltage 250 V / 400 V, rated current 16 A, cable type H05VV-F, fire class Eca, total length 1 m, nominal cross section conductor 1.5 mm², color of coding/ contact carrier black
92.257.1003.1	cable assembly GST18I5K1B- 15 10SW	GST18i5 connection cable, female - free end, number of poles 5, rated voltage 250 V / 400 V, rated current 16 A, cable type H05VV-F, fire class Eca, total length 1 m, nominal cross section conductor 1.5 mm², color of coding/ contact carrier black
92.257.1004.1	cable assembly GST18I5KS-S 15 10SW	GST18i5 connection cable, male - free end, number of poles 5, rated voltage 250 V / 400 V, rated current 16 A, cable type H05VV-F, fire class Eca, total length 1 m, nominal cross section conductor 1.5 mm², color of coding/ contact carrier black

technical drawing

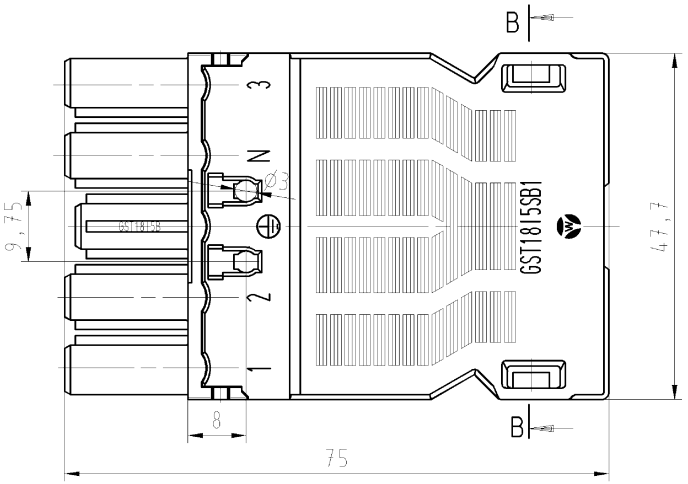

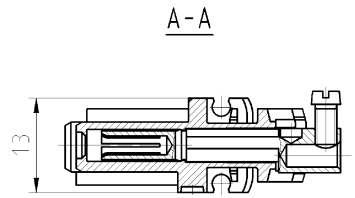

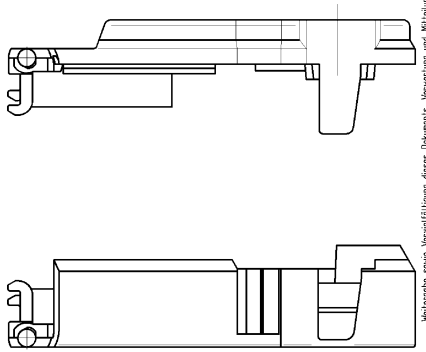

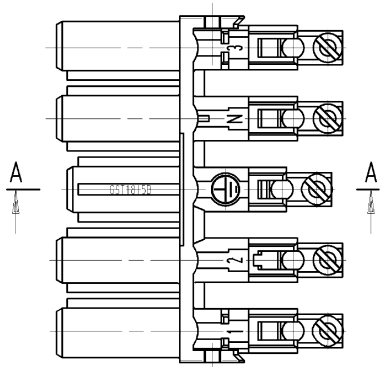

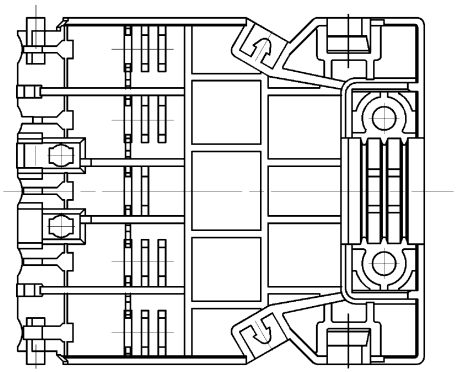

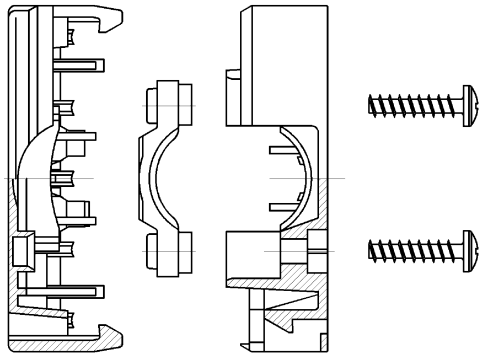

Teilschnitt B-B

These dimensions will be especially checked at delivery

Only inspection dimensions

With /E marked dimensions are only valid for internal use

Diese Maße werden bei Abnahme besonders geprüft

Ausschließlich Prüfmaße

Mit /E gekennzeichnete Maße sind nur für interne Zwecke gültig

Weitergabe sowie Vervielfältigung dieses Dokuments, Verwertung und Mitteilung seines Inhalts sind verboten, soweit nicht ausdrücklich gestattet.
The reproduction, distribution and utilization of this document as well as the communication of its contents to others without express authorization is prohibited.

Weitere Daten siehe Katalog
further data see catalog

Teile-Nr. part-no.	Farbe colour	Typ / type	Kabel-Außendurchmesser Klemmbereich cable lockable HO5VV..	NYM..
92.953.3053.0	weiß / white	GST18I5S B1BZR1 WS	9,5 - 13,5 mm	10,5 - 12,5 mm
92.953.3053.1	schwarz / black	GST18I5S B1BZR1 SW		
92.953.3153.0	weiß / white	GST18I5S B1BZR2 WS	7,0 - 10,0 mm	
92.953.3153.1	schwarz / black	GST18I5S B1BZR2 SW		

Tolerierung Size ISO 14405Ⓔ/Tolerance system Size ISO 14405Ⓔ.
(This ISO-standard desbribes the envelope principle. According to the envelope principle the deviations of form and parallelism are limited by the size tolerances).

ja/yes ☒ Stoffverbots- und Deklarationsliste nach UU-TOM-05/03 ist einzuhalten.
Conformity with Wieland document UU-TOM-05/03 (list of prohibited / declarable hazardous substances) to be declared!

Freitoleranz nach General tolerance -

CAD - Zeichnung, keine manuellen Änderungen
CAD - drawing, no manual modifications allowed

1.Verwendung: First Use: -

Blatt: Sheet: 1 von of 1

Index	Änderung/Revision	Datum / Blatt Date / Sheet
c		14.01.2013/
b		18.03.2009/
a		16.11.2005/

Werkstoff/Material

Maßstab/Scale %

Vol. mm³ Ofl./Surf. mm²

	Tag/Date	Name
2004 gezeichnet drawn	08.12.	Treschan
geprüft checked	-	-
Normgepr. Stand. check	-	-

Ersatz für/Replacement for: -

Type

Zeichnung Nr./Drawing No. T 92.953.3053.0 01K Index c

Maße in mm/Dimensions are in mm

wieland Elektrische Verbindungen

Benennung/Title female connector with strain relief
BUCHSENTEIL_MIT_ZUGENTLASTUNG
Schraubanschluss/ screw connection
250/400V AC, 20A, 2,5qmm

OU-PEM-08/91b

92953305300 1K_2 CADW3028 treschan 2013-01-14T10:55:49 1.000