product data sheet

item no. 58.504.2055.0

knife disconnect terminal WT 4 TKM

Knife edge disconnect terminal with Screw connection for mounting on TS35, nominal cross section: 4 mm², width: 6 mm, color: grey

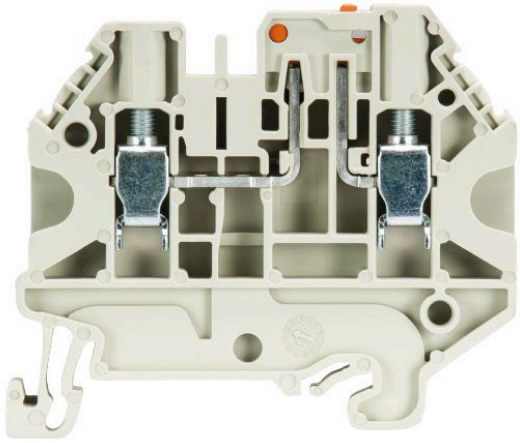

item no.	58.504.2055.0
EAN	4049088164019
order unit	100 piece(s)

certificates / approvals

technical data

general

nominal cross section	4 mm²
color	grey
number of levels	1
number of clamp positions per level	2
width/grid dimension	6 mm
insulating housing	PA666
inflammability class of insulation material acc. with UL94	V0
mounting method	DIN rail (top hat rail)
terminal blocks for electrical installations	yes
Anzahl der Klemmstellen je Etage	2
Montageart	DIN rail (top hat rail)
Brennbarkeitsklasse des Isolierstoffs	V0
Reihenklemmen für Installationsverteiler	yes

technical data

rated current	24 A
rated voltage	500 V
rated impulse voltage	6 kV
pollution degree	3
closing plate required	yes
type of insulation material	thermoplastic
length	56 mm

connection data

connection type 1	screw connection
connection type 2	screw connection

minimum cross section solid	0.14 mm²
maximum cross section solid	6 mm²
minimum cross section fine stranded	0.14 mm²
maximum cross section fine stranded	6 mm²
minumum conductor cross section (flex., stranded) with cable end sleeve	0.5 mm²
maximum conductor cross section (flex., stranded) with cable end sleeve	4 mm²
wire strip length	9 mm
torque conductor mounting	0.5 Nm

technical data UL/CSA

cross section UL	26-10 AWG
voltage UL	300 V
current factory wiring	16 A
current field wiring	16 A
cross section CSA	26-10 AWG
voltage CSA	300 V
current CSA	16 A

accessories

item no.	type	description
Z7.261.1227.0	jumper bar IVB WKF 4 - 2	Cross connector, insulated for DIN rail terminal blocks type WKF..., 2 -pole
Z7.261.1327.0	jumper bar IVB WKF 4 - 3	Cross connector, insulated for DIN rail terminal blocks type WKF..., 3 -pole
Z7.261.1427.0	jumper bar IVB WKF 4 - 4	Cross connector, insulated for DIN rail terminal blocks type WKF..., 4 -pole
Z7.261.1527.0	jumper bar IVB WKF 4 - 5	Cross connector, insulated for DIN rail terminal blocks type WKF..., 5 -pole
Z7.261.1627.0	jumper bar IVB WKF 4 - 6	Cross connector, insulated for DIN rail terminal blocks type WKF..., 6 -pole
Z7.261.1727.0	jumper bar IVB WKF 4 - 7	Cross connector, insulated for DIN rail terminal blocks type WKF..., 7 -pole
Z7.261.1827.0	jumper bar IVB WKF 4 - 8	Cross connector, insulated for DIN rail terminal blocks type WKF..., 8 -pole
Z7.261.1927.0	jumper bar IVB WKF 4 - 9	Cross connector, insulated for DIN rail terminal blocks type WKF..., 9 -pole
Z7.261.2027.0	jumper bar IVB WKF 4 - 10	Cross connector, insulated for DIN rail terminal blocks type WKF..., 10 -pole
98.300.0000.0	mounting rail TS 35x7,5 UNPERF - l:2000mm	Mounting rail TS 35, unslotted, size 7,5 mm, length 2 m, material steel. galv. zinc-plated and passivated
98.300.1000.0	mounting rail TS 35x7,5 PERF 15mm - l:2000mm	Mounting rail TS 35, slotted, size 7,5 mm, length 2 m, material steel. galv. zinc-plated and passivated
98.300.1800.0	mounting rail TS 35x7,5 PERF 18mm - l:2000mm	Mounting rail TS 35, slotted, size 7,5 mm, length 2 m, material steel. galv. zinc-plated and passivated
98.300.1900.0	mounting rail TS 35x7,5 PERF 25mm - l:2000mm	Mounting rail TS 35, slotted, size 7,5 mm, length 2 m, material steel. galv. zinc-plated and passivated
98.360.0000.0	mounting rail TS 35x15-2,3 UNPERF - l:2000mm	Mounting rail TS 35, unslotted, size 15 mm, length 2 m, material steel. galv. zinc-plated and passivated
98.360.0004.0	mounting rail TS 35x15-2,3 UNPERF FZN - l:2000mm	Mounting rail TS 35, unslotted, size 15 mm, length 2 m, material steel, hot galvanized
98.370.0000.0	mounting rail TS 35x15 UNPERF - l:2000mm	Mounting rail TS 35, unslotted, size 15 mm, length 2 m, material steel. galv. zinc-plated and dichromated
98.370.1000.0	mounting rail TS 35x15 PERF 15mm - l:2000mm	Mounting rail TS 35, slotted, size 15 mm, length 2 m, material steel. galv. zinc-plated and passivated
98.380.0000.0	mounting rail TS 35x15-2,3 UNPERF CU - l:2000mm	Mounting rail TS 35, unslotted, size 15 mm, length 2 m, material E copper
07.313.2855.0	partition TW WT 4... GR	Partition for DIN rail terminal blocks type WT 16, grey
07.313.2955.0	end plate AP WT 4... GR	End plate for DIN rail terminal blocks type WT 4..., color: grey
04.242.6053.0	marking tag strips 9705 A / 6 / 10	Marking tag strips for DIN rail terminal blocks type 9700 A / 6…, 10 tags per strip, color: white, unmarked, markable with Wieplot plotter- system

technical drawing

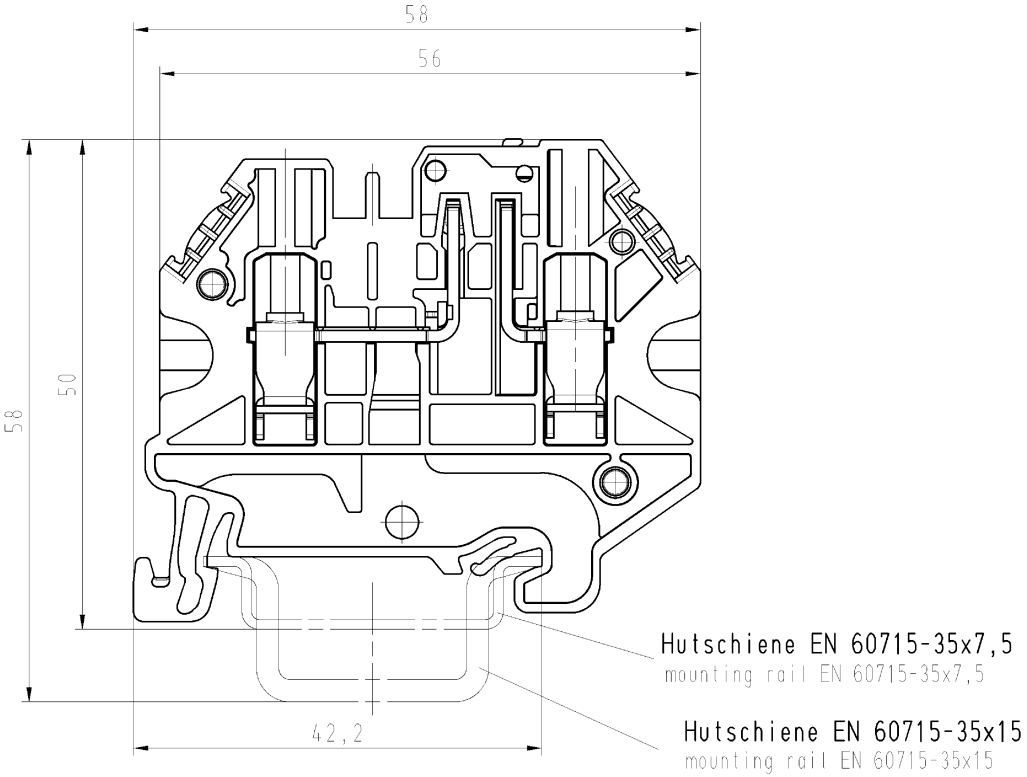

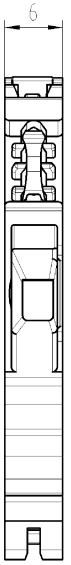

M/scale 1:1

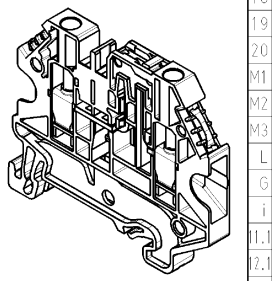

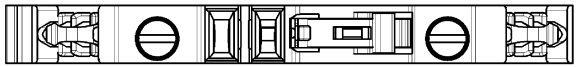

∗ = spezielle Verpackung / special package

	Teile-Nr. part-no.	Farbe color
	58.504.2055.0	grau grey
	58.504.2055.6	blau blue
∗	58.504.2095.0	grau grey
∗	58.504.2095.6	blau blue

These dimensions will be especially checked at delivery
Only inspection dimensions
With /E marked dimensions are only valid for internal use

Diese Maße werden bei Abnahme besonders geprüft
Ausschließlich Prüfmaße
Mit /E gekennzeichnete Maße sind nur für interne Zwecke gültig

Weitergabe sowie Vervielfältigung dieses Dokuments, Verwertung und Mitteilung seines Inhalts sind verboten, soweit nicht ausdrücklich gestattet.
The reproduction, distribution and utilization of this document as well as the communication of its contents to others without express autorization is prohibited.

Tolerierung nach DIN 7167/Tolerance system acc. to DIN 7167.
(This DIN-standard desbribes the envelope principle. According to the envelope principle the deviations of form and parallelism are limited by the size tolerances).

ja/yes ☒ Stoffverbots- und Deklarationsliste nach UU-TOM-05/03 ist einzuhalten.
Conformity with Wieland document UU-TOM-05/03 (list of prohibited / declarable hazardous substances) to be declared!

Freitoleranz nach
General tolerance

CAD - Zeichnung, keine manuellen Änderungen
CAD - drawing, no manual modifications allowed

1.Verwendung: -
First Use:

Blatt: 1 von 1
Sheet: 1 of 1

/	Werkstoff/Material	2013	Tag/Date	Name	T	Zeichnung Nr./Drawing No.	Index
/		gezeichnet drawn	18.01.	Eller		58.504.2055.0 01K	
/	Maßstab/Scale	geprüft checked	-	-			
/	2:1	Normgepr. Stand. check	-	-		Maße in mm/Dimensions are in mm	
/	Vol. mm³ Ofl./Surf. mm²	Ersatz für/Replacement for: -					
/	wieland Elektrische Verbindungen	Type	Benennung/Title				
/		WT 4 TKM	DURCHGANGSKLEMME feed thourgh terminal block				

Index | Datum / Blatt Date / Sheet
Änderung/Revision

58504205500 1K_2 CADM3070 U0016728 2013-01-21T12:37:26 1.000

OU-PEM-08/91a