product data sheet

item no. 58.506.0055.0

# feed-through terminal WT 6

Feed-through terminal with Screw connection for mounting on TS 35, nominal cross section: 6 mm², width: 8 mm, color: grey



| | |
|---|---|
| item no. | 58.506.0055.0 |
| EAN | 4049088154065 |
| order unit | 100 piece(s) |

## certificates / approvals

SEV-Ex

## technical data

**general**

| | |
|---|---|
| nominal cross section | 6 mm² |
| color | grey |
| number of levels | 1 |
| number of clamp positions per level | 2 |
| width/grid dimension | 8 mm |
| insulating housing | PA666 |
| inflammability class of insulation material acc. with UL94 | V0 |
| explosion-tested version "Ex e" | yes |
| mounting method | DIN rail (top hat rail) |
| terminal blocks for electrical installations | yes |
| Anzahl der Klemmstellen je Etage | 2 |
| Montageart | DIN rail (top hat rail) |
| Brennbarkeitsklasse des Isolierstoffs | V0 |
| Reihenklemmen für Installationsverteiler | yes |

**technical data**

| | |
|---|---|
| rated current | 41 A |
| rated voltage | 1000 V |
| rated impulse voltage | 8 kV |
| pollution degree | 3 |
| closing plate required | yes |
| type of insulation material | thermoplastic |
| length | 48 mm |
| width | 8 mm |
| height | 48 mm |

**connection data**

| | |
|---|---|
| connection type 1 | screw connection |
| connection type 2 | screw connection |
| minimum cross section solid | 0.2 mm² |
| maximum cross section solid | 10 mm² |
| minimum cross section fine stranded | 0.2 mm² |
| maximum cross section fine stranded | 10 mm² |
| minumum conductor cross section (flex., stranded) with cable end sleeve | 0.5 mm² |
| maximum conductor cross section (flex., stranded) with cable end sleeve | 6 mm² |
| wire strip length | 11 mm |
| torque conductor mounting | 1.2 Nm |

**technical data UL/CSA**

| | |
|---|---|
| cross section UL | 24-8 AWG |
| voltage UL | 600 V |
| current factory wiring | 50 A |
| current field wiring | 50 A |
| cross section CSA | 24-8 AWG |
| voltage CSA | 600 V |
| current CSA | 50 A |

## accessories

| item no. | type | description |
|---|---|---|
| Z7.282.5227.0 | insulated jumper bar IVB WKFN 6- 2 | INSUL. JUMPER BAR IVB WKFN 6 - 2 |
| Z7.282.5327.0 | insulated jumper bar IVB WKFN 6- 3 | INSUL. JUMPER BAR IVB WKFN 6 - 3 |
| Z7.282.5427.0 | insulated jumper bar IVB WKFN 6- 4 | NSUL. JUMPER BAR IVB WKFN 6 - 4 |
| Z7.282.5527.0 | insulated jumper bar IVB WKFN 6- 5 | INSUL. JUMPER BAR IVB WKFN 6 - 5 |
| 98.300.0000.0 | mounting rail TS 35x7,5 UNPERF - l:2000mm | Mounting rail TS 35, unslotted, size 7,5 mm, length 2 m, material steel. galv. zinc-plated and passivated |
| 98.300.1000.0 | mounting rail TS 35x7,5 PERF 15mm - l:2000mm | Mounting rail TS 35, slotted, size 7,5 mm, length 2 m, material steel. galv. zinc-plated and passivated |
| 98.300.1800.0 | mounting rail TS 35x7,5 PERF 18mm - l:2000mm | Mounting rail TS 35, slotted, size 7,5 mm, length 2 m, material steel. galv. zinc-plated and passivated |
| 98.300.1900.0 | mounting rail TS 35x7,5 PERF 25mm - l:2000mm | Mounting rail TS 35, slotted, size 7,5 mm, length 2 m, material steel. galv. zinc-plated and passivated |
| 98.360.0000.0 | mounting rail TS 35x15-2,3 UNPERF - l:2000mm | Mounting rail TS 35, unslotted, size 15 mm, length 2 m, material steel. galv. zinc-plated and passivated |
| 98.360.0004.0 | mounting rail TS 35x15-2,3 UNPERF FZN - l:2000mm | Mounting rail TS 35, unslotted, size 15 mm, length 2 m, material steel, hot galvanized |
| 98.370.0000.0 | mounting rail TS 35x15 UNPERF - l:2000mm | Mounting rail TS 35, unslotted, size 15 mm, length 2 m, material steel. galv. zinc-plated and dichromated |
| 98.370.1000.0 | mounting rail TS 35x15 PERF 15mm - l:2000mm | Mounting rail TS 35, slotted, size 15 mm, length 2 m, material steel. galv. zinc-plated and passivated |
| 98.380.0000.0 | mounting rail TS 35x15-2,3 UNPERF CU - l:2000mm | Mounting rail TS 35, unslotted, size 15 mm, length 2 m, material E copper |
| 07.313.2555.0 | end plate AP WT 2,5-10 GR | End plate for DIN rail terminal blocks type WT 2,5..., color: grey |
| 07.313.2655.0 | partition TW WT 2,5-10 GR | Partition for DIN rail terminal blocks type WT 2,5, WT 4, WT 6 and WT 10..., color: grey |
| 04.242.8053.0 | marking tag strips 9705 A / 8 / 10 | Marking tag strips for DIN rail terminal blocks type 9700 A / 8…, 10 tags per strip, color: blue, unmarked, markable with Wieplot plotter-system |

technical drawing

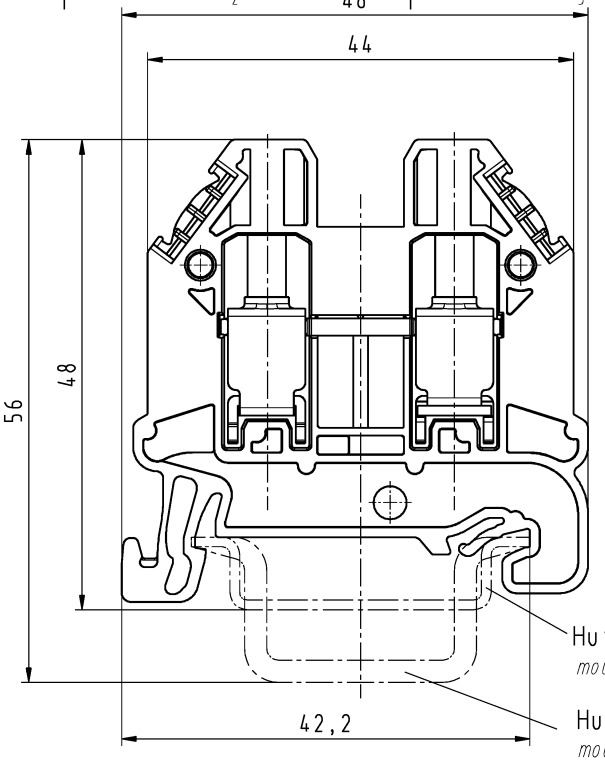


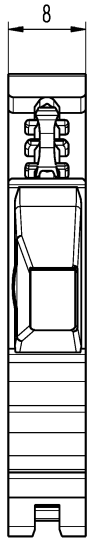


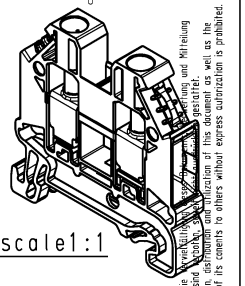

M/scale1:1

| | Teile-Nr./part no. | Farbe/color | Typ/type |
|---|---|---|---|
| | 58.506.0055.0 | grau/grey | WT 6 |
| | 58.506.0055.1 | schwarz/black | WT 6 SW |
| | 58.506.0055.2 | weiß/white | WT 6 WS |
| ⓐ | 58.506.0055.3 | schiefergrau/slate grey | WT 6 GR |
| | 58.506.0055.4 | braun/brown | WT 6 BR |
| | 58.506.0055.5 | rot/red | WT 6 RT |
| | 58.506.0055.6 | blau/blue | WT 6 BL |
| | 58.506.0055.7 | grün/green | WT 6 GN |
| | 58.506.0055.8 | gelb/yellow | WT 6 GE |
| | 58.506.0055.9 | orange/orange | WT 6 OR |

Weitere Daten siehe KATALOG oder eKatalog
additional data see CATALOG or eCATALOG
www.wieland-electric.com
eshop.wieland-electric.com

Tolerierung Size ISO 14405 Ⓔ / Tolerance system Size ISO 14405 Ⓔ.
(This ISO-standard describes the envelope principle. According to the envelope principle the deviations of form and parallelism are limited by the size tolerances).

ja/yes ☒ Stoffverbots- und Deklarationsliste nach WN 5020 010 ist einzuhalten. Conformity with Wieland document WN 5020 010 e (list of prohibited / declarable hazardous substances) to be declared!

Freitoleranz nach / General tolerance

CAD - Zeichnung, keine manuellen Änderungen / CAD - drawing, no manual modifications allowed

1. Verwendung: / First Use:

Blatt: 1 von 1 / Sheet: 1 of 1

Werkstoff / Material

Maßstab / Scale: 2:1

Vol. mm³ Oft./Srf. mm²

| | Tag/Date | Name |
|---|---|---|
| gezeichnet / drawn | 21.01.2013 | Eller |
| geprüft / checked | | |
| Normgeor. Stand. check | | |

Zeichnung Nr. / Drawing No.: T 58.506.0055.0 01K

Index: a

Maße in mm / Dimensions are in mm

Ersatz für / Replacement for:

| Index | Datum / Blatt Date / Sheet |
|---|---|
| a | 22.03.2017 / |

Änderung / Revision

wieland
www.wieland-electric.com

Type

Bennenung/Title

# DURCHGANGSKLEMME

through terminal

Diese Maße werden bei Abnahme besonders geprüft
Ausschließlich Prüfmaße
Mit /E gekennzeichnete Maße sind nur für interne Zwecke gültig

These dimensions will be especially checked at delivery
Only inspection dimensions
With /E marked dimensions are only valid for internal use

Weitergabe sowie Vervielfältigung dieses Dokuments, Verwertung und Mitteilung seines Inhalts sind verboten, soweit nicht ausdrücklich gestattet.
The reproduction, distribution and utilization of this document as well as the communication of its contents to others without express authorization is prohibited.