product data sheet

item no. 56.703.5053.0

feed-through terminal WKF 2,5/D1/2/35

Feed-through terminal with tension spring connection for mounting on TS35, nominal cross section: 2.5 mm², width: 5 mm, color: grey

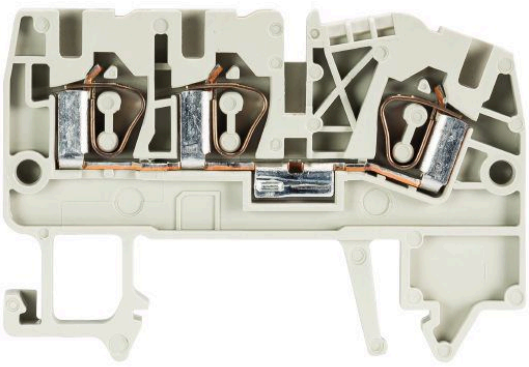

item no.	56.703.5053.0
EAN	4015573346697
order unit	100 piece(s)

certificates / approvals

CAN-Ex ATEX

technical data

general

nominal cross section	2.5 mm²
color	grey
number of levels	1
number of clamp positions per level	3
width/grid dimension	5 mm
insulating housing	PA666
inflammability class of insulation material acc. with UL94	V0
explosion-tested version "Ex e"	yes
mounting method	DIN rail (top hat rail) 35/7.5 mm
terminal blocks for electrical installations	yes
Anzahl der Klemmstellen je Etage	3
Montageart	DIN rail (top hat rail) 35/7.5 mm
Brennbarkeitsklasse des Isolierstoffs	V0
Reihenklemmen für Installationsverteiler	yes

technical data

rated current	24 A
rated voltage	800 V
rated impulse voltage	8 kV
pollution degree	3
closing plate required	yes
type of insulation material	thermoplastic
length	60.5 mm

connection data

connection type 1	spring clamp connection

connection type 2	spring clamp connection
minimum cross section solid	0.5 mm²
maximum cross section solid	4 mm²
minimum cross section fine stranded	0.13 mm²
maximum cross section fine stranded	2.5 mm²
wire strip length	11 mm

technical data UL/CSA

cross section UL	22-12 AWG
voltage UL	600 V
current factory wiring	30 A
current field wiring	20 A
cross section CSA	24-12 AWG
voltage CSA	600 V
current CSA	25 A

accessories

item no.	type	description
Z7.280.6227.0	jumper bar IVBWKF 2,5- 2	Cross connector, insulated for DIN rail terminal blocks type WKF..., 2 -pole
Z7.280.6327.0	jumper bar IVBWKF 2,5- 3	Cross connector, insulated for DIN rail terminal blocks type WKF..., 3 -pole
Z7.280.6427.0	jumper bar IVBWKF 2,5- 4	Cross connector, insulated for DIN rail terminal blocks type WKF..., 4 -pole
Z7.280.6527.0	jumper bar IVBWKF 2,5- 5	Cross connector, insulated for DIN rail terminal blocks type WKF..., 5 -pole
Z7.280.6627.0	jumper bar IVBWKF 2,5- 6	Cross connector, insulated for DIN rail terminal blocks type WKF..., 6 -pole
Z7.280.6727.0	jumper bar IVBWKF 2,5- 7	Cross connector, insulated for DIN rail terminal blocks type WKF..., 7 -pole
Z7.280.6827.0	jumper bar IVBWKF 2,5- 8	Cross connector, insulated for DIN rail terminal blocks type WKF..., 8 -pole
Z7.280.6927.0	jumper bar IVBWKF 2,5- 9	Cross connector, insulated for DIN rail terminal blocks type WKF..., 9 -pole
Z7.280.7027.0	jumper bar IVBWKF 2,5- 10	Cross connector, insulated for DIN rail terminal blocks type WKF..., 10 -pole
Z7.280.7127.0	jumper bar IVBWKF 2,5- 11	Cross connector, insulated for DIN rail terminal blocks type WKF..., 11 -pole
Z7.280.7227.0	jumper bar IVBWKF 2,5- 12	Cross connector, insulated for DIN rail terminal blocks type WKF..., 12 -pole
Z7.280.7327.0	jumper bar IVBWKF 2,5- 13	
Z7.280.7427.0	jumper bar IVBWKF 2,5 - 14	
Z7.280.7527.0	jumper bar IVBWKF 2,5- 15	
Z7.280.7627.0	jumper bar IVBWKF 2,5 - 16	
Z7.280.7727.0	jumper bar IVBWKF 2,5 - 17	
Z7.280.7827.0	jumper bar IVBWKF 2,5 - 18	
Z7.280.7927.0	jumper bar IVBWKF 2,5 - 19	
Z7.280.8027.0	jumper bar IVBWKF 2,5- 20	Cross connector, insulated for DIN rail terminal blocks type WKF..., 20 -pole
98.300.0000.0	mounting rail TS 35x7,5 UNPERF - l:2000mm	Mounting rail TS 35, unslotted, size 7,5 mm, length 2 m, material steel. galv. zinc-plated and passivated
98.300.1000.0	mounting rail TS 35x7,5 PERF 15mm - l:2000mm	Mounting rail TS 35, slotted, size 7,5 mm, length 2 m, material steel. galv. zinc-plated and passivated
98.300.1800.0	mounting rail TS 35x7,5 PERF 18mm - l:2000mm	Mounting rail TS 35, slotted, size 7,5 mm, length 2 m, material steel. galv. zinc-plated and passivated
98.300.1900.0	mounting rail TS 35x7,5 PERF 25mm - l:2000mm	Mounting rail TS 35, slotted, size 7,5 mm, length 2 m, material steel. galv. zinc-plated and passivated
98.360.0000.0	mounting rail TS 35x15-2,3 UNPERF - l:2000mm	Mounting rail TS 35, unslotted, size 15 mm, length 2 m, material steel. galv. zinc-plated and passivated
98.360.0004.0	mounting rail TS 35x15-2,3 UNPERF FZN - l:2000mm	Mounting rail TS 35, unslotted, size 15 mm, length 2 m, material steel, hot galvanized
98.370.0000.0	mounting rail TS 35x15 UNPERF - l:2000mm	Mounting rail TS 35, unslotted, size 15 mm, length 2 m, material steel. galv. zinc-plated and dichromated
98.370.1000.0	mounting rail TS 35x15 PERF 15mm - l:2000mm	Mounting rail TS 35, slotted, size 15 mm, length 2 m, material steel. galv. zinc-plated and passivated
98.380.0000.0	mounting rail TS 35x15-2,3 UNPERF CU - l:2000mm	Mounting rail TS 35, unslotted, size 15 mm, length 2 m, material E copper
07.312.2353.0	end plate APF 2,5/D 1/2	End plate for DIN rail terminal blocks type WKF 2,5/D1/2..., color: grey
07.312.2353.6	end plate APF 2,5/D 1/2 BLAU	End plate for DIN rail terminal blocks type WKF 2,5/D1/2..., color: blue
07.312.2353.7	end plate APF 2,5/D 1/2 GRUEN	End plate for DIN rail terminal blocks type WKF 2,5/D1/2..., color: green
07.312.2453.0	partition TWF 2,5/D 1/2	Partition for DIN rail terminal blocks type WKF 2,5/D1/2..., color: grey
07.312.2453.6	partition TWF 2,5/D 1/2 BLAU	Partition for DIN rail terminal blocks type WKF ..., color blue

technical drawing

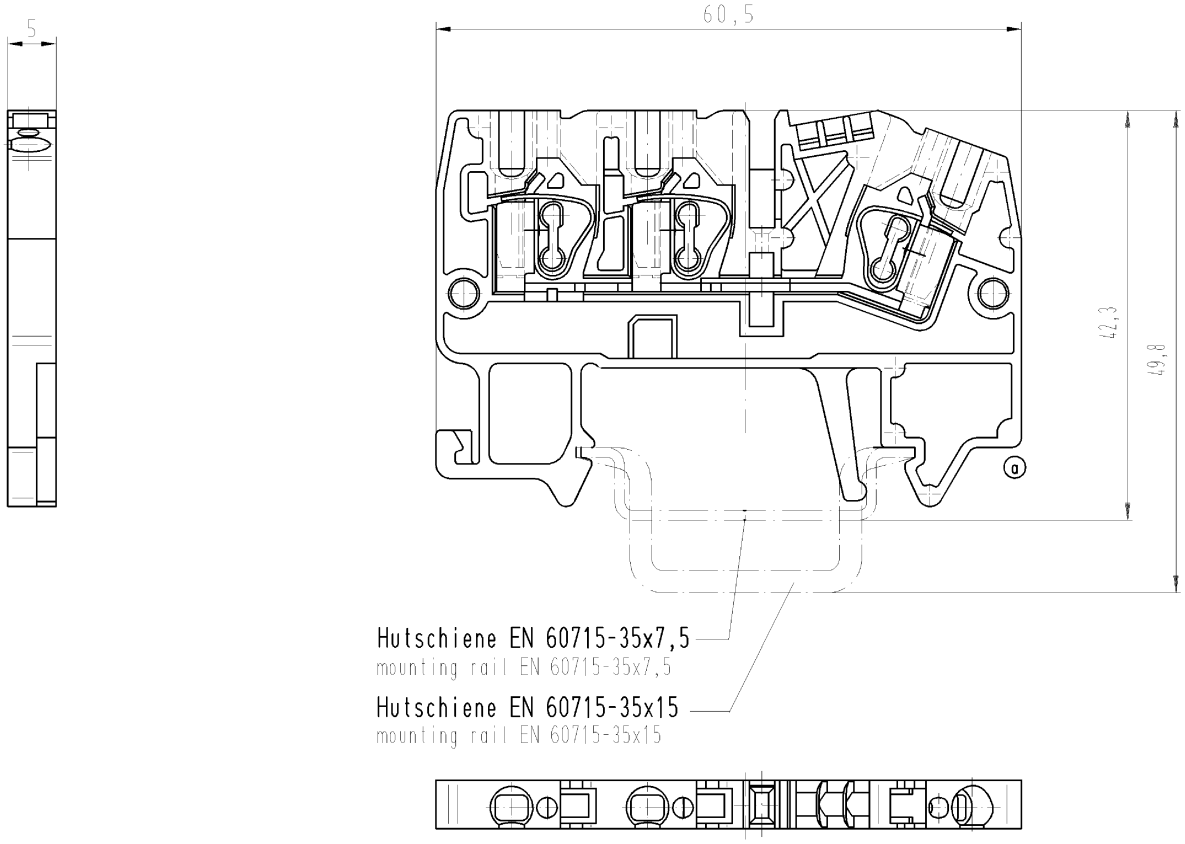

Weitere Daten siehe Katalog
further data see catalog

Teile-Nr. part-nr.	Farbe colour	Typ type
56.703.5053.0	grau grey	WKF 2,5/D1/2/35
56.703.5053.6	blau blue	WKF 2,5/D1/2/35 BLAU WKF 2,5/D1/2/35 blue

Freitoleranz nach DIN | CAD - Zeichnung, keine manuellen Änderungen | 1.Verwendung: - | Bl.: 1 von 1

Maßstab 2:1

2002	Tag	Name
Entworfen	17.07.	Schneiderb.
Geprüft	-	-
Normgepr.	-	-

Zeichnung Nr. T 56.703.5053.0 01K Index a

Ersatz für: -

wieland Elektrische Verbindungen

Buchstabe	Datum / Blatt
a	28.06.2004/

Änderung

Benennung
DURCHGANGSKLEMME
Schraubenlos
terminal (screwless)

Diese Maße werden bei Abnahme besonders geprüft
Ausschließlich Prüfmaße
Mit /E gekennzeichnete Maße sind nur für interne Zwecke gültig

Weitergabe sowie Vervielfältigung dieses Dokuments, Verwertung und Mitteilung seines Inhalts sind verboten, soweit nicht ausdrücklich gestattet.
The reproduction, distribution and utilization of this document as well as the communication of its contents to others without express autorization is prohibited.

56703505300 1K_4 CADW020 Bauer 2004-06-29T08:12:50 1.000