product data sheet

item no. 56.704.9255.0

earth terminal WKFN 4 E/SL/35

Ground terminal with tension spring connection for mounting on TS 35, nominal cross section: 4 mm², width: 6 mm, color: Green-yellow

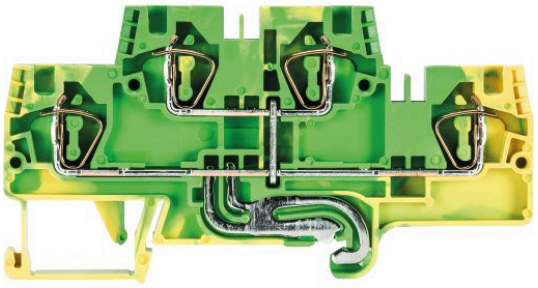

item no.	56.704.9255.0
EAN	4015573767195
order unit	100 piece(s)

certificates / approvals

technical data

general

nominal cross section	4 mm²
color	green/yellow
number of levels	2
number of clamp positions per level	2
width/grid dimension	6 mm
insulating housing	PA666
inflammability class of insulation material acc. with UL94	V0
explosion-tested version "Ex e"	yes
mounting method	DIN rail (top hat rail) 35/7.5 mm
terminal blocks for electrical installations	yes
Anzahl der Klemmstellen je Etage	2
Montageart	DIN rail (top hat rail) 35/7.5 mm
Brennbarkeitsklasse des Isolierstoffs	V0
Reihenklemmen für Installationsverteiler	yes

technical data

rated impulse voltage	6 kV
pollution degree	3
closing plate required	yes
type of insulation material	thermoplastic
length	90.1 mm

connection data

connection type 1	spring clamp connection
connection type 2	spring clamp connection
minimum cross section solid	0.13 mm²

maximum cross section solid	6 mm²
minimum cross section fine stranded	0.13 mm²
maximum cross section fine stranded	4 mm²
wire strip length	11 mm

technical data UL/CSA

cross section CSA	24-10 AWG

accessories

item no.	type	description
Z7.261.1227.0	jumper bar IVB WKF 4 - 2	Cross connector, insulated for DIN rail terminal blocks type WKF..., 2 -pole
Z7.261.1327.0	jumper bar IVB WKF 4 - 3	Cross connector, insulated for DIN rail terminal blocks type WKF..., 3 -pole
Z7.261.1427.0	jumper bar IVB WKF 4 - 4	Cross connector, insulated for DIN rail terminal blocks type WKF..., 4 -pole
Z7.261.1527.0	jumper bar IVB WKF 4 - 5	Cross connector, insulated for DIN rail terminal blocks type WKF..., 5 -pole
Z7.261.1627.0	jumper bar IVB WKF 4 - 6	Cross connector, insulated for DIN rail terminal blocks type WKF..., 6 -pole
Z7.261.1727.0	jumper bar IVB WKF 4 - 7	Cross connector, insulated for DIN rail terminal blocks type WKF..., 7 -pole
Z7.261.1827.0	jumper bar IVB WKF 4 - 8	Cross connector, insulated for DIN rail terminal blocks type WKF..., 8 -pole
Z7.261.1927.0	jumper bar IVB WKF 4 - 9	Cross connector, insulated for DIN rail terminal blocks type WKF..., 9 -pole
Z7.261.2027.0	jumper bar IVB WKF 4 - 10	Cross connector, insulated for DIN rail terminal blocks type WKF..., 10 -pole
98.300.0000.0	mounting rail TS 35x7,5 UNPERF - l:2000mm	Mounting rail TS 35, unslotted, size 7,5 mm, length 2 m, material steel. galv. zinc-plated and passivated
98.300.1000.0	mounting rail TS 35x7,5 PERF 15mm - l:2000mm	Mounting rail TS 35, slotted, size 7,5 mm, length 2 m, material steel. galv. zinc-plated and passivated
98.300.1800.0	mounting rail TS 35x7,5 PERF 18mm - l:2000mm	Mounting rail TS 35, slotted, size 7,5 mm, length 2 m, material steel. galv. zinc-plated and passivated
98.300.1900.0	mounting rail TS 35x7,5 PERF 25mm - l:2000mm	Mounting rail TS 35, slotted, size 7,5 mm, length 2 m, material steel. galv. zinc-plated and passivated
98.360.0000.0	mounting rail TS 35x15-2,3 UNPERF - l:2000mm	Mounting rail TS 35, unslotted, size 15 mm, length 2 m, material steel. galv. zinc-plated and passivated
98.360.0004.0	mounting rail TS 35x15-2,3 UNPERF FZN - l:2000mm	Mounting rail TS 35, unslotted, size 15 mm, length 2 m, material steel, hot galvanized
98.370.0000.0	mounting rail TS 35x15 UNPERF - l:2000mm	Mounting rail TS 35, unslotted, size 15 mm, length 2 m, material steel. galv. zinc-plated and dichromated
98.370.1000.0	mounting rail TS 35x15 PERF 15mm - l:2000mm	Mounting rail TS 35, slotted, size 15 mm, length 2 m, material steel. galv. zinc-plated and passivated
98.380.0000.0	mounting rail TS 35x15-2,3 UNPERF CU - l:2000mm	Mounting rail TS 35, unslotted, size 15 mm, length 2 m, material E copper
07.312.9655.0	end plate APFN 4 E/35	End plate for DIN rail terminal blocks type WKFN 4 E..., color: grey
07.312.9655.7	end plate APFN 4 E/35 GRUEN	End plate for DIN rail terminal blocks type WKFN 4 E..., color: green
07.312.9755.0	partition TWFN 4 E/35	Partition for DIN rail terminal blocks type WKFN 4 E..., color: grey
04.242.6053.0	marking tag strips 9705 A / 6 / 10	Marking tag strips for DIN rail terminal blocks type 9700 A / 6…, 10 tags per strip, color: white, unmarked, markable with Wieplot plotter- system

technical drawing

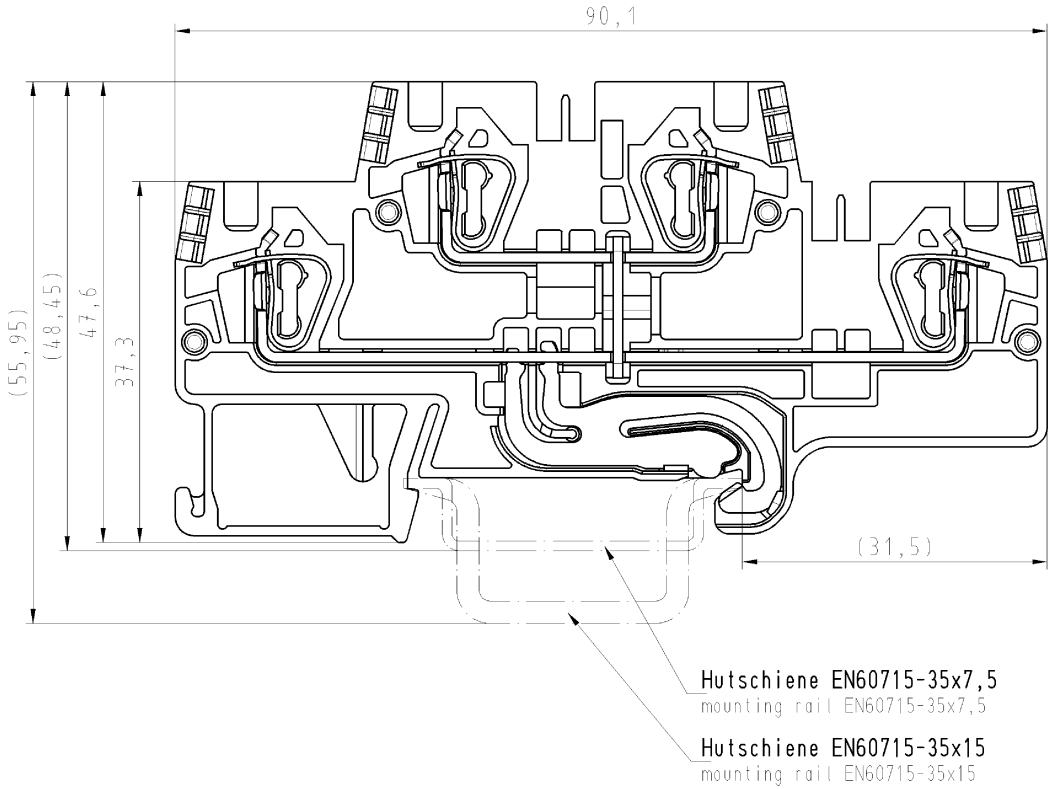

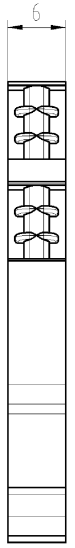

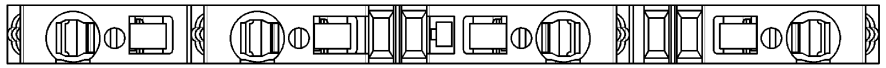

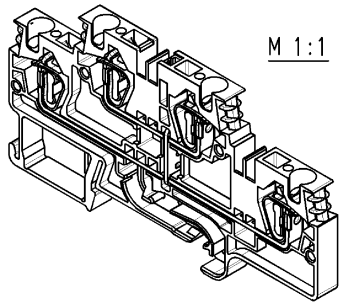

Weitere Daten siehe Katalog
further data see catalog

Freitoleranz nach			CAD - Zeichnung, keine manuellen Änderungen			1.Verwendung: -		Bl.: 1 von 1
/	/	Maßstab 2:1	Werkstoff und Oberfläche: Farbe: grün/gelb colour: green/yellow	2004	Tag	Name	Zeichnung Nr. 56.704.9255.0 01K	Index
/	/			Entworfen	15.03.	Bauer F.		
/	/			Geprüft	-	-		
/	/	Val. mm²	Ott. mm²	Normgepr.	-	-	Ersatz für: -	
/	/							
Buchstabe	Datum / Blatt							
Änderung								

wieland
Elektrische Verbindungen

Typ
WKFN 4
E/SL/35

Benennung
SCHUTZLEITERETAGENKLEMME
fasis Pro Federkraftausführung 4mm²
earth terminal with spring clamp connection

Weitergabe sowie Vervielfältigung dieses Dokuments, Verwertung und Mitteilung seines Inhalts sind verboten, soweit nicht ausdrücklich gestattet. The reproduction of this document and utilization of the documents as well as the communication of its contents to others without express authorization is prohibited.

Diese Maße werden bei Abnahme besonders geprüft
Ausschließlich Prüfmaße
Mit (ø gekennzeichnete Maße sind nur für interne Zwecke gültig

5670492550 1K_4 CAD\020 Bauer 2004-03-15T14:48:15 1.000