product data sheet

item no. 56.702.9153.0

earth terminal WKF 1,5 D2/2SL/35

Ground terminal with tension spring connection for mounting on TS 35, nominal cross section: 1.5 mm², width: 4.15 mm, color: Green-yellow

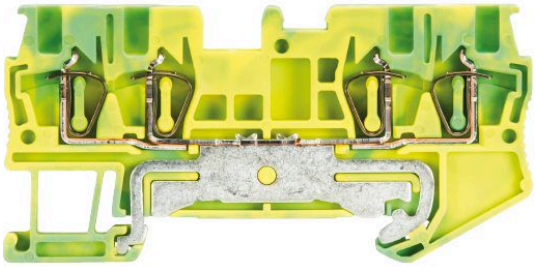

item no.	56.702.9153.0
EAN	4015573731851
order unit	50 piece(s)

certificates / approvals

technical data

general

nominal cross section	1.5 mm²
color	green/yellow
number of levels	1
number of clamp positions per level	4
width/grid dimension	4.15 mm
insulating housing	PA666
inflammability class of insulation material acc. with UL94	V0
explosion-tested version "Ex e"	yes
mounting method	DIN rail (top hat rail) 35/7.5 mm
terminal blocks for electrical installations	yes
Anzahl der Klemmstellen je Etage	4
Montageart	DIN rail (top hat rail) 35/7.5 mm
Brennbarkeitsklasse des Isolierstoffs	V0
Reihenklemmen für Installationsverteiler	yes

technical data

rated voltage	500 V
rated impulse voltage	6 kV
pollution degree	3
closing plate required	yes
type of insulation material	thermoplastic
length	72.2 mm

connection data

connection type 1	spring clamp connection
connection type 2	spring clamp connection

minimum cross section solid	0.08 mm²
maximum cross section solid	1.5 mm²
minimum cross section fine stranded	0.08 mm²
maximum cross section fine stranded	1.5 mm²
wire strip length	10 mm

technical data UL/CSA

cross section UL	26-14 AWG
voltage UL	300 V
cross section CSA	26-14 AWG
voltage CSA	300 V

accessories

item no.	type	description
Z7.268.0227.0	jumper bar IVB WKF 1,5- 2	Cross connector, insulated for DIN rail terminal blocks type WKF..., 2 -pole
Z7.268.0327.0	jumper bar IVB WKF 1,5- 3	Cross connector, insulated for DIN rail terminal blocks type WKF..., 3 -pole
Z7.268.0427.0	jumper bar IVB WKF 1,5- 4	Cross connector, insulated for DIN rail terminal blocks type WKF..., 4 -pole
Z7.268.0527.0	jumper bar IVB WKF 1,5- 5	Cross connector, insulated for DIN rail terminal blocks type WKF..., 5 -pole
Z7.268.1027.0	jumper bar IVB WKF 1,5- 10	Cross connector, insulated for DIN rail terminal blocks type WKF..., 10-pole
Z7.268.2027.0	jumper bar IVB WKF 1,5- 20	Cross connector, insulated for DIN rail terminal blocks type WKF..., 20-pole
98.300.0000.0	mounting rail TS 35x7,5 UNPERF - l:2000mm	Mounting rail TS 35, unslotted, size 7,5 mm, length 2 m, material steel. galv. zinc-plated and passivated
98.300.1000.0	mounting rail TS 35x7,5 PERF 15mm - l:2000mm	Mounting rail TS 35, slotted, size 7,5 mm, length 2 m, material steel. galv. zinc-plated and passivated
98.300.1800.0	mounting rail TS 35x7,5 PERF 18mm - l:2000mm	Mounting rail TS 35, slotted, size 7,5 mm, length 2 m, material steel. galv. zinc-plated and passivated
98.300.1900.0	mounting rail TS 35x7,5 PERF 25mm - l:2000mm	Mounting rail TS 35, slotted, size 7,5 mm, length 2 m, material steel. galv. zinc-plated and passivated
98.360.0000.0	mounting rail TS 35x15-2,3 UNPERF - l:2000mm	Mounting rail TS 35, unslotted, size 15 mm, length 2 m, material steel. galv. zinc-plated and passivated
98.360.0004.0	mounting rail TS 35x15-2,3 UNPERF FZN - l:2000mm	Mounting rail TS 35, unslotted, size 15 mm, length 2 m, material steel, hot galvanized
98.370.0000.0	mounting rail TS 35x15 UNPERF - l:2000mm	Mounting rail TS 35, unslotted, size 15 mm, length 2 m, material steel. galv. zinc-plated and dichromated
98.370.1000.0	mounting rail TS 35x15 PERF 15mm - l:2000mm	Mounting rail TS 35, slotted, size 15 mm, length 2 m, material steel. galv. zinc-plated and passivated
98.380.0000.0	mounting rail TS 35x15-2,3 UNPERF CU - l:2000mm	Mounting rail TS 35, unslotted, size 15 mm, length 2 m, material E copper
07.312.8553.0	end plate APF 1,5 D2/2	End plate for DIN rail terminal blocks type WKF 1,5 D2/2..., color: grey
07.312.8653.0	partition TWF 1,5 D2/2	Partition for DIN rail terminal blocks type WKF 1,5 D2/2..., color: grey
Z4.243.2053.0	marking tag plate BZ/WKF 1,5/10	plate with marking tags for DIN rail terminal blocks type WKF 1,5, unmarked, markable with Wieprint printing-system
04.243.2053.0	marking tag strips BZ/WKF 1,5	Marking tag strips for DIN rail terminal blocks type WKF 1,5, 10 tags per strip, color: blue, unmarked, markable with Wieplot plotter-system

technical drawing

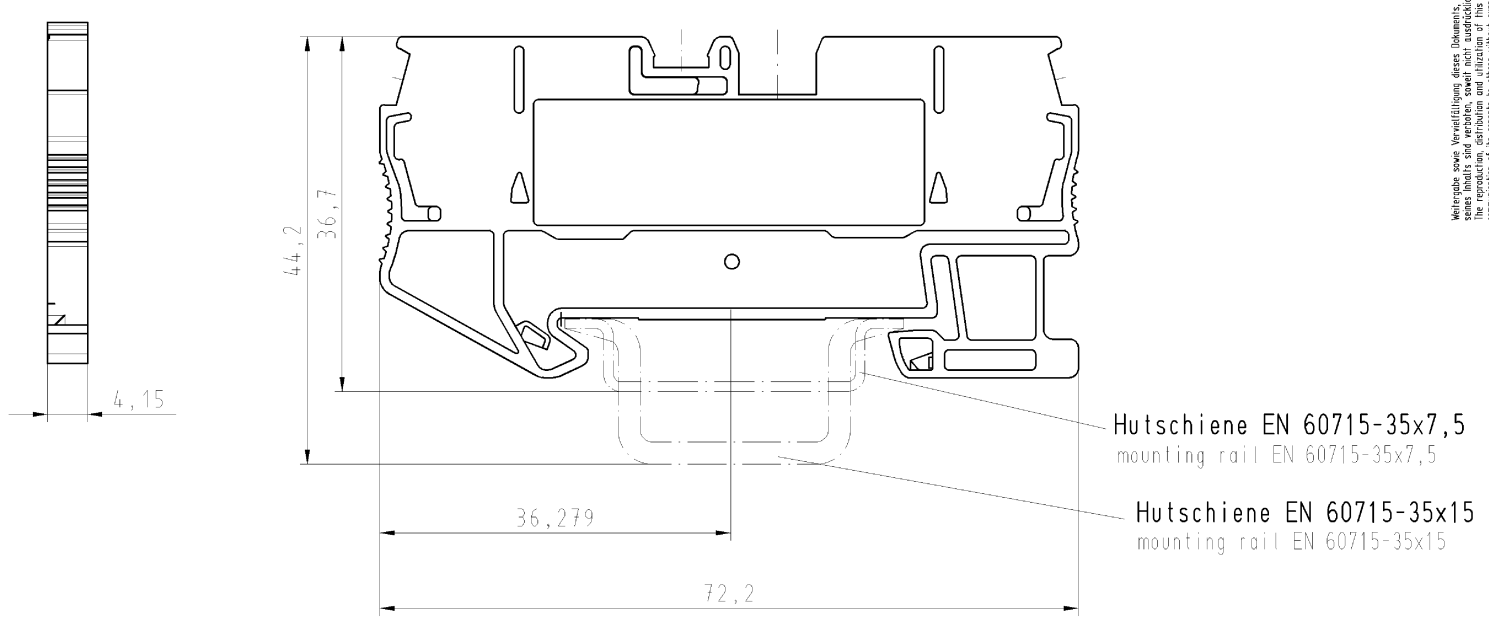

Weitere Daten siehe Katalog
further data see catalog

Teile-Nr./part-nr.	Typ/type	Farbe/colour
56.702.9153.0	WKF1,5/D2/2SL/35	grün-gelb/green-yellow

Freitoleranz nach DIN		CAD - Zeichnung, keine manuellen Änderungen			1.Verwendung: -		Bl.: 1 von 1
/	Maßstab	Werkstoff und Oberfläche:	2004	Tag	Name	T	Zeichnung Nr. 56.702.9153.0 01K
/	2:1		Entworfen	28.01.	Schmitt J.		Index
/			Geprüft	-	-		
/			Normgepr.	-	-	Ersatz für: -	
/		wieland Elektrische Verbindungen			Benennung		
/					DUO_SCHUTZLEITERKLEMME		
Buchstabe	Datum / Blatt				Federkraftanschluß		
Änderung					Duo earth terminal with spring clamp		

Diese Maße werden bei Abnahme besonders geprüft
Ausschließlich Prüfmaße
Mit /E gekennzeichnete Maße sind nur für interne Zwecke gültig

Weitergabe sowie Vervielfältigung dieses Dokuments, Verwertung und Mitteilung seines Inhalts sind verboten, soweit nicht ausdrücklich gestattet.
The reproduction, distribution and utilization of this document as well as the communication of its contents to others without express autorization is prohibited.

56702915300 1K_4 CADW100 Schmitt 2004-01-30T13:05:47 1.000