product data sheet

item no. 56.706.0055.6

feed-through terminal WKFN 6 / 35 BLAU

Feed-through terminal with tension spring connection for mounting on TS35/ TS 32, nominal cross section: 6 mm², width: 8 mm, color: blue

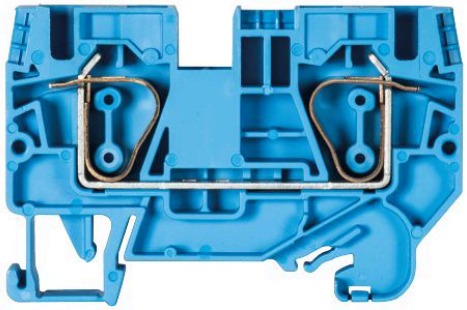

item no.	56.706.0055.6
EAN	4015573911109
order unit	50 piece(s)

certificates / approvals

technical data

general

nominal cross section	6 mm²
color	blue
number of levels	1
number of clamp positions per level	2
width/grid dimension	8 mm
insulating housing	PA666
inflammability class of insulation material acc. with UL94	V0
explosion-tested version "Ex e"	yes
mounting method	DIN rail (top hat rail)/G-rail
terminal blocks for electrical installations	yes
Anzahl der Klemmstellen je Etage	2
Montageart	DIN rail (top hat rail)/G-rail
Brennbarkeitsklasse des Isolierstoffs	V0
Reihenklemmen für Installationsverteiler	yes

technical data

rated current	41 A
rated voltage	800 V
rated impulse voltage	8 kV
pollution degree	3
closing plate required	yes
type of insulation material	thermoplastic
length	66.4 mm

connection data

connection type 1	spring clamp connection

connection type 2	spring clamp connection
minimum cross section solid	0.2 mm²
maximum cross section solid	10 mm²
minimum cross section fine stranded	0.2 mm²
maximum cross section fine stranded	6 mm²
wire strip length	12 mm

technical data UL/CSA

cross section UL	24-8 AWG
voltage UL	600 V
current factory wiring	50 A
current field wiring	50 A
cross section CSA	24-8 AWG
voltage CSA	600 V
current CSA	41 A

accessories

item no.	type	description
Z7.282.5227.0	insulated jumper bar IVB WKFN 6- 2	INSUL. JUMPER BAR IVB WKFN 6 - 2
Z7.282.5327.0	insulated jumper bar IVB WKFN 6- 3	INSUL. JUMPER BAR IVB WKFN 6 - 3
Z7.282.5427.0	insulated jumper bar IVB WKFN 6- 4	NSUL. JUMPER BAR IVB WKFN 6 - 4
Z7.282.5527.0	insulated jumper bar IVB WKFN 6- 5	INSUL. JUMPER BAR IVB WKFN 6 - 5
98.300.0000.0	mounting rail TS 35x7,5 UNPERF - l:2000mm	Mounting rail TS 35, unslotted, size 7,5 mm, length 2 m, material steel. galv. zinc-plated and passivated
98.300.1000.0	mounting rail TS 35x7,5 PERF 15mm - l:2000mm	Mounting rail TS 35, slotted, size 7,5 mm, length 2 m, material steel. galv. zinc-plated and passivated
98.300.1800.0	mounting rail TS 35x7,5 PERF 18mm - l:2000mm	Mounting rail TS 35, slotted, size 7,5 mm, length 2 m, material steel. galv. zinc-plated and passivated
98.300.1900.0	mounting rail TS 35x7,5 PERF 25mm - l:2000mm	Mounting rail TS 35, slotted, size 7,5 mm, length 2 m, material steel. galv. zinc-plated and passivated
98.360.0000.0	mounting rail TS 35x15-2,3 UNPERF - l:2000mm	Mounting rail TS 35, unslotted, size 15 mm, length 2 m, material steel. galv. zinc-plated and passivated
98.360.0004.0	mounting rail TS 35x15-2,3 UNPERF FZN - l:2000mm	Mounting rail TS 35, unslotted, size 15 mm, length 2 m, material steel, hot galvanized
98.370.0000.0	mounting rail TS 35x15 UNPERF - l:2000mm	Mounting rail TS 35, unslotted, size 15 mm, length 2 m, material steel. galv. zinc-plated and dichromated
98.370.1000.0	mounting rail TS 35x15 PERF 15mm - l:2000mm	Mounting rail TS 35, slotted, size 15 mm, length 2 m, material steel. galv. zinc-plated and passivated
98.380.0000.0	mounting rail TS 35x15-2,3 UNPERF CU - l:2000mm	Mounting rail TS 35, unslotted, size 15 mm, length 2 m, material E copper
04.343.6253.8	warning cover ADF 6/4 GELB	Cover with warning symbol for DIN rail terminal blocks type WKF ...
07.313.0455.0	end plate APFN 6/35	End plate for DIN rail terminal blocks type WKFN 6..., color: grey
07.313.0455.6	end plate APFN 6/35 BLAU	End plate for DIN rail terminal blocks type WKFN 6..., color: blue
07.313.0455.7	end plate APFN 6/35 GRUEN	End plate for DIN rail terminal blocks type WKFN 6..., color: green
07.313.0555.0	partition TWFN 6/35	Partition for DIN rail terminal blocks type WKFN 6..., color: grey
07.313.0555.6	partition TWFN 6/35 BLAU	Partition for DIN rail terminal blocks type TWFN 6/35 BLUE
04.242.8053.0	marking tag strips 9705 A / 8 / 10	Marking tag strips for DIN rail terminal blocks type 9700 A / 8…, 10 tags per strip, color: blue, unmarked, markable with Wieplot plotter-system

technical drawing

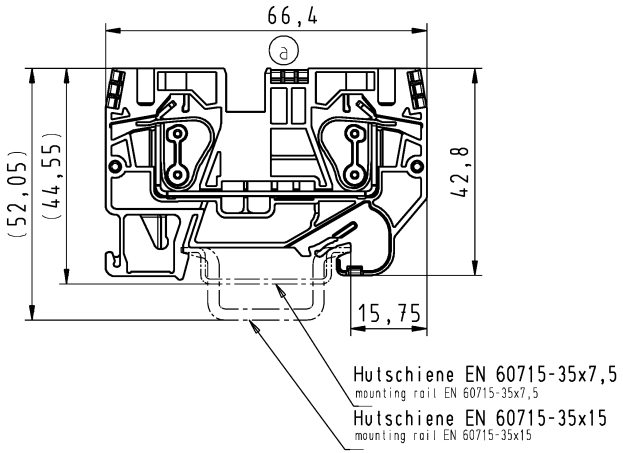



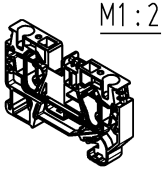

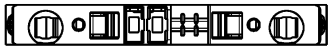

	Teile-Nr./part no.	Farbe/color	Typ/type
	56.706.0055.0	grau/grey	WKFN 6
ⓒ	56.706.0055.3	schiefergrau/slate grey	WKFN 6 GR
	56.706.0055.6	blau/blue	WKFN 6 BL
ⓑ	56.706.0055.7	grün/green	WKFN 6 GN

Weitere Daten siehe KATALOG oder eKatalog | www.wieland-electric.com
additional data see CATALOG or eCATALOG | eshop.wieland-electric.com

Tolerierung Size ISO 14405 Ⓔ / Tolerance system Size ISO 14405 Ⓔ.
(This ISO-standard describes the envelope principle. According to the envelope principle the deviations of form and parallelism are limited by the size tolerances).

ja/yes ☒ Stoffverbots- und Deklarationsliste nach WN 5020 010 ist einzuhalten. / Conformity with Wieland document WN 5020 010 e (list of prohibited / declarable hazardous substances) to be declared!

Freitoleranz nach / General tolerance

CAD - Zeichnung, keine manuellen Änderungen / CAD - drawing, no manual modifications allowed

1. Verwendung: / First Use:

Blatt: 1 von 1 / Sheet: 1 of 1

Werkstoff / Material

Maßstab / Scale: 1:1

	Tag/Date	Name
gezeichnet / drawn	06.06.2007	Bauer F.
geprüft / checked		
Normgeor. Stand. check		

Zeichnung Nr. / Drawing No.: 56.706.0055.0 01K

Index: c

Maße in mm / Dimensions are in mm

Index	Datum / Blatt / Date / Sheet
c	22.03.2017 /
b	07.11.2012 /
a	05.05.2011 /

Änderung / Revision

Vol. mm³ Oft./Srf. mm²

Ersatz für / Replacement for:

Type

Bennenung/Title

DURCHGANGSKLEMME

fasis pro Federkraftanschluß 6mm²

terminal with spring clamp connection

wieland
www.wieland-electric.com

Diese Maße werden bei Abnahme besonders geprüft / Ausschließlich Prüfmaße

Mit (E gekennzeichnete Maße sind nur für interne Zwecke gültig

These dimensions will be especially checked at delivery / Only inspection dimensions

With (E marked dimensions are only valid for internal use

Weitergabe sowie Vervielfältigung dieses Dokuments, Verwertung und Mitteilung seines Inhalts sind verboten, soweit nicht ausdrücklich gestattet. The reproduction, distribution and utilization of this document as well as the communication of its contents to others without express authorization is prohibited.