product data sheet

item no. 55.504.1053.5

feed-through terminal WKM 4 / 15 ROT V-0

Feed-through terminal with Screw connection for mounting on TS 15 , nominal cross section: 4 mm², width: 6 mm, color: red

item no.	55.504.1053.5
EAN	4015573507098
order unit	100 piece(s)

certificates / approvals

CAN-Ex ATEX USA-Ex

technical data

note

note	* with/without jumper

general

nominal cross section	4 mm²
color	red
number of levels	1
number of clamp positions per level	2
width/grid dimension	6 mm
insulating housing	PA666
inflammability class of insulation material acc. with UL94	V0
explosion-tested version "Ex e"	yes
mounting method	DIN rail (top hat rail) 15 mm
terminal blocks for electrical installations	yes
Anzahl der Klemmstellen je Etage	2
Montageart	DIN rail (top hat rail) 15 mm
Brennbarkeitsklasse des Isolierstoffs	V0
Reihenklemmen für Installationsverteiler	yes

technical data

rated current	28 A
rated voltage	500 V
rated impulse voltage	6 kV
pollution degree	3
closing plate required	yes
type of insulation material	thermoplastic
length	32 mm

connection data

connection type 1	screw connection
connection type 2	screw connection
minimum cross section solid	0.5 mm²
maximum cross section solid	6 mm²
minimum cross section fine stranded	0.5 mm²
maximum cross section fine stranded	4 mm²
wire strip length	9 mm
torque conductor mounting	0.5 Nm

technical data UL/CSA

cross section UL	22-10 AWG
voltage UL	600 V
current factory wiring	30 A
current field wiring	30 A
cross section CSA	20-10 AWG
voltage CSA	600 V
current CSA	37 A

accessories

item no.	type	description
Z7.271.2227.0	insulated jumper bar IVB WK4 E/U- 2	Cross connector, insulated for DIN rail terminal blocks type WK ..., 2 -pole
Z7.271.2327.0	insulated jumper bar IVB WK4 E/U- 3	Cross connector, insulated for DIN rail terminal blocks type WK ..., 3 -pole
Z7.271.2427.0	insulated jumper bar IVB WK4 E/U- 4	Cross connector, insulated for DIN rail terminal blocks type WK ..., 4 -pole
Z7.271.2527.0	insulated jumper bar IVB WK4 E/U- 5	Cross connector, insulated for DIN rail terminal blocks type WK ..., 5 -pole
Z7.271.2627.0	insulated jumper bar IVB WK4 E/U- 6	Cross connector, insulated for DIN rail terminal blocks type WK ..., 6 -pole
Z7.271.2727.0	insulated jumper bar IVB WK4 E/U- 7	Cross connector, insulated for DIN rail terminal blocks type WK ..., 7 -pole
Z7.271.2827.0	insulated jumper bar IVB WK4 E/U- 8	Cross connector, insulated for DIN rail terminal blocks type WK ..., 8 -pole
Z7.271.2927.0	insulated jumper bar IVB WK4 E/U- 9	Cross connector, insulated for DIN rail terminal blocks type WK ..., 9 -pole
Z7.271.3027.0	insulated jumper bar IVB WK4 E/U-10	Cross connector, insulated for DIN rail terminal blocks type WK ..., 10 -pole
Z7.271.3127.0	insulated jumper bar IVB WK4 E/U-11	Cross connector, insulated for DIN rail terminal blocks type WK ..., 11 -pole
Z7.271.3227.0	insulated jumper bar IVB WK4 E/U-12	Cross connector, insulated for DIN rail terminal blocks type WK ..., 12 -pole
98.090.0015.0	mounting rail TS 15 PERF - l:2000mm	Mounting rail TS 15, slotted, Höhe 5,5 mm, length 2 m, material steel. galv. zinc-plated and passivated
07.311.0853.0	end plate APM 2,5 - 4 / 15	End plate for DIN rail terminal blocks type WKM 2,5… und WKM 4..., color: grey
07.311.0853.6	end plate APM 2,5 - 4 / 15 BLAU	End plate for DIN rail terminal blocks type WKM 2,5… und WKM 4..., color: blue
07.311.1853.0	partition TWM 2,5 - 4 /15	Partition for DIN rail terminal blocks type WKM 2,5… and WKM 4..., color: grey
07.311.1853.6	partition TW 2,5 - 4 /15 BLAU	Partition for DIN rail terminal blocks type WK ..., color blue

technical drawing

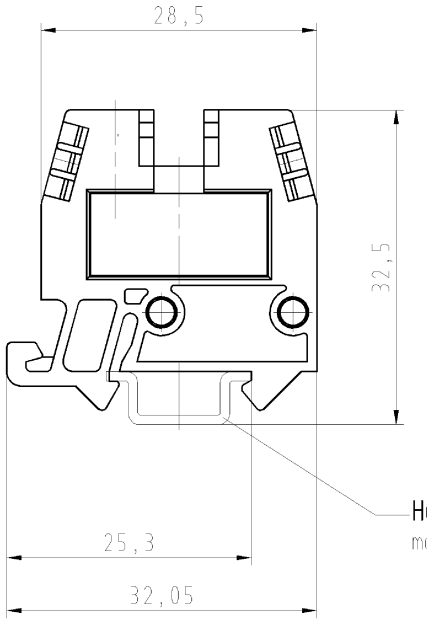

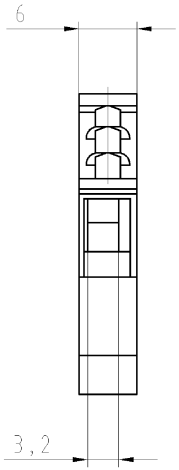

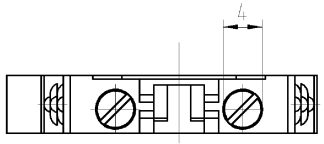

Diese Maße werden bei Abnahme besonders geprüft
Ausschließlich Prüfmaße
Mit Ø gekennzeichnete Maße sind nur für interne Zwecke gültig

Weitergabe sowie Vervielfältigung dieses Dokuments, Verwertung und Mitteilung seines Inhalts sind verboten, soweit nicht ausdrücklich gestattet.
The reproduction, distribution and utilization of this document as well as the communication of its contents to others without express authorization is prohibited.

Weitere Daten siehe Katalog
further data see catalog

Zchng.-Nr./part-nr.	Farbe/colour	Typ/type
55.504.1053.0	grau/grey	WKM4/15
55.504.1053.1	schwarz/black	WKM4/15 SCHWARZ
55.504.1053.5	rot/red	WKM4/15 ROT
55.504.1053.6	blau/blue	WKM4/15 BLAU
55.504.1053.7	grün/green	WKM4/15 GRÜN
55.504.1053.8	gelb/yellow	WKM4/15 GELB
55.504.1053.9	orange	WKM4/15 ORANGE
55.504.1095.0	grau/grey	WKM4/15

Freitoleranz nach DIN			CAD - Zeichnung, keine manuellen Änderungen			1.Verwendung: -		Bl.: 1 von 1
/	/	Maßstab 2:1		2003	Tag	Name	T	Zeichnung Nr. 55.504.1053.0 01K	Index a
/	/			Entworfen	30.04.	Schmitt		
/	/			Geprüft	-	-		
/	/			Normgepr.	-	-		Ersatz für: -
a	04.07.2006/	wieland Elektrische Verbindungen				Benennung DURCHGANGSKLEMME terminal		
Buchstabe	Datum / Blatt							
Änderung								

55504105300IK_4 G4DW1016 Hoffmann 2006-07-04T09:27:57 1.000