product data sheet

item no. 57.504.6355.0

distribution terminal WK / 4-8S / IW / U/V0

Distribution terminal block with push on connection for mounting on TS 35 and TS 32, width 6 mm, color gray,

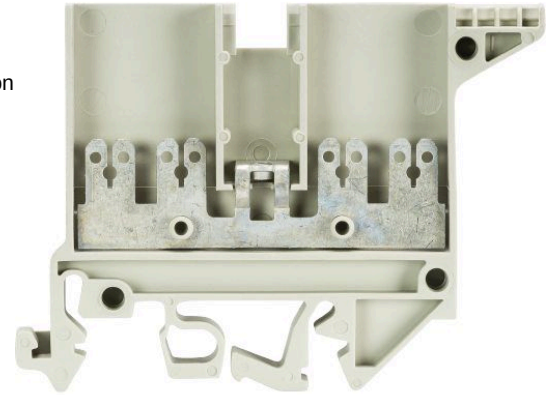

item no.	57.504.6355.0
EAN	4015573575714
order unit	100 piece(s)

certificates / approvals

technical data

general

color	grey
number of levels	1
number of clamp positions per level	4
width/grid dimension	6 mm
insulating housing	PA666
inflammability class of insulation material acc. with UL94	V0
explosion-tested version "Ex e"	no
mounting method	DIN rail (top hat rail)/G-rail
terminal blocks for electrical installations	yes
Anzahl der Klemmstellen je Etage	4
Montageart	DIN rail (top hat rail)/G-rail
Brennbarkeitsklasse des Isolierstoffs	V0
Reihenklemmen für Installationsverteiler	yes

technical data

rated current	20 A
rated voltage	800 V
rated impulse voltage	8 kV
pollution degree	3
closing plate required	yes
type of insulation material	thermoplastic
length	67.3 mm

connection data

connection type 1	flat connection
connection type 2	flat connection

technical data UL/CSA

voltage UL	300 V
current factory wiring	10 A
current field wiring	10 A
cross section CSA	22-12 AWG
voltage CSA	300 V
current CSA	10 A

accessories

item no.	type	description
Z7.281.3227.0	jumper bar VB WK/..S/IW/U- 2	Cross connector for DIN rail terminal blocks type WK ..., 2 -pole
Z7.281.3327.0	jumper bar VB WK/..S/IW/U- 3	Cross connector for DIN rail terminal blocks type WK ..., 3 -pole
Z7.281.3427.0	jumper bar VB WK/..S/IW/U- 4	Cross connector for DIN rail terminal blocks type WK ..., 4 -pole
Z7.281.3527.0	jumper bar VB WK/..S/IW/U- 5	Cross connector for DIN rail terminal blocks type WK ..., 5 -pole
Z7.281.3627.0	jumper bar VB WK/..S/IW/U- 6	Cross connector for DIN rail terminal blocks type WK ..., 6 -pole
98.190.0000.0	mounting rail TS 32 UNPERF - l:2000mm	Mounting rail G 32, unslotted, Höhe 5,5 mm, length 2 m, material steel. galv. zinc-plated and passivated
98.190.1000.0	mounting rail TS 32 PERF 15mm - l:2000mm	Mounting rail G 32, slotted, Höhe 15 mm, length 2 m, material steel. galv. zinc-plated and passivated
98.210.0000.0	mounting rail TS 32 UNPERF AL - l:2000mm	Mounting rail G 32, unslotted, Höhe 15 mm, length 2 m, material Aluminium
98.220.0000.0	mounting rail TS 32 UNPERF CU - l:2000mm	Mounting rail G 32, unslotted, Höhe 15 mm, length 2 m, material E copper
98.300.0000.0	mounting rail TS 35x7,5 UNPERF - l:2000mm	Mounting rail TS 35, unslotted, size 7,5 mm, length 2 m, material steel. galv. zinc-plated and passivated
98.300.1000.0	mounting rail TS 35x7,5 PERF 15mm - l:2000mm	Mounting rail TS 35, slotted, size 7,5 mm, length 2 m, material steel. galv. zinc-plated and passivated
98.300.1900.0	mounting rail TS 35x7,5 PERF 25mm - l:2000mm	Mounting rail TS 35, slotted, size 7,5 mm, length 2 m, material steel. galv. zinc-plated and passivated
98.360.0000.0	mounting rail TS 35x15-2,3 UNPERF - l:2000mm	Mounting rail TS 35, unslotted, size 15 mm, length 2 m, material steel. galv. zinc-plated and passivated
98.360.0004.0	mounting rail TS 35x15-2,3 UNPERF FZN - l:2000mm	Mounting rail TS 35, unslotted, size 15 mm, length 2 m, material steel, hot galvanized
98.370.0000.0	mounting rail TS 35x15 UNPERF - l:2000mm	Mounting rail TS 35, unslotted, size 15 mm, length 2 m, material steel. galv. zinc-plated and dichromated
98.370.1000.0	mounting rail TS 35x15 PERF 15mm - l:2000mm	Mounting rail TS 35, slotted, size 15 mm, length 2 m, material steel. galv. zinc-plated and passivated
98.380.0000.0	mounting rail TS 35x15-2,3 UNPERF CU - l:2000mm	Mounting rail TS 35, unslotted, size 15 mm, length 2 m, material E copper
07.311.4355.0	end plate AP 4 S / IW/V0	End plate for DIN rail terminal blocks type WK / 4-8S / IW..., color: grey

technical drawing

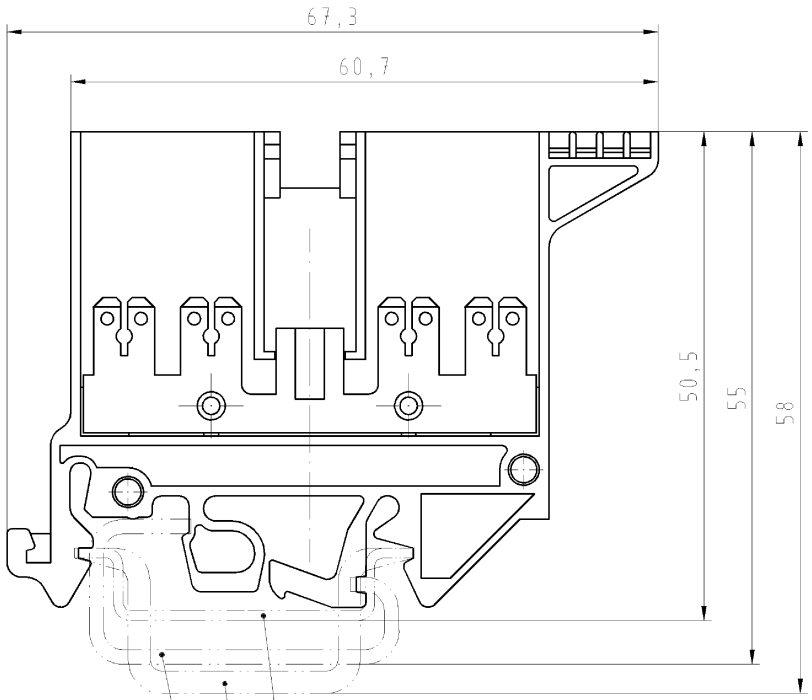

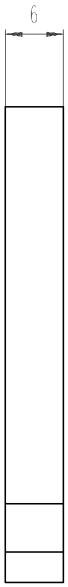

Hutschiene EN 60715-35x7,5
mounting rail EN 60715-35x7,5

Hutschiene EN 60715-35x15
mounting rail EN 60715-35x15

G-Schiene EN 60715-G32
G-rail EN 60715-G32



Weitere Daten siehe Katalog
further data see catalog

*spezielle Verpackung
specific package

	Teile-Nr. Part-number	Farbe colour	Typ type
	57.504.6355.0	grau/grey	WK4-8S / IW U / VO
*	57.504.6395.0	grau/grey	WK4-8S / IW U / VO

Freitoleranz nach | CAD - Zeichnung, keine manuellen Änderungen | 1.Verwendung: - | Bl.: 1 von 1

Maßstab: % | Werkstoff und Oberfläche: | Val. mm² | Oft. mm²

2004	Tag	Name
Entworfen	12.10.	Schmitt J.
Geprüft	-	-
Normgepr.	-	-

T | Zeichnung Nr. 57.504.6355.0 01K | Index

Ersatz für: -

wieland Elektrische Verbindungen

WK/4-8
S/IW/U/VO

Benennung
VERTEILERKLEMME
mit 6 Anschlüsse/ with 6push-on connectors 2,8x0,8
Distribution terminal

Buchstabe | Datum / Blatt
Änderung

QU-PEM-08/91

57504635500 1K_4 CADW028 Schmitt 2004-10-12T13:20:24 1.000

Weitergabe sowie Vervielfältigung dieses Dokuments, Verwertung und Mitteilung seines Inhalts sind verboten, soweit nicht ausdrücklich gestattet.
The reproduction, distribution and utilization of this document as well as the communication of its contents to others without express autorization is prohibited.

Diese Maße werden bei Abnahme besonders geprüft
Ausschließlich Prüfmaße
Mit Ø gekennzeichnete Maße sind nur für interne Zwecke gültig