product data sheet

item no. 56.106.0155.0

fuse terminal WKN 6 TK D

Feed-through terminal with Screw connection for mounting on TS 35, nominal cross section: 6 mm², width: 8 mm, color: grey

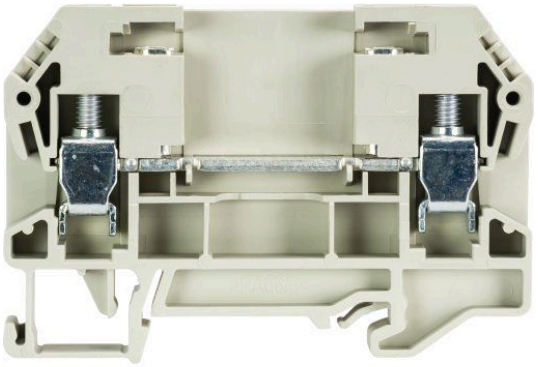

item no.	56.106.0155.0
EAN	4049088036040
order unit	50 piece(s)

certificates / approvals

technical data

general

nominal cross section	6 mm²
color	grey
number of levels	1
number of clamp positions per level	2
width/grid dimension	8 mm
insulating housing	PA666
inflammability class of insulation material acc. with UL94	V0
mounting method	DIN rail (top hat rail) 35/7.5 mm
terminal blocks for electrical installations	no
Anzahl der Klemmstellen je Etage	2
Montageart	DIN rail (top hat rail) 35/7.5 mm
Brennbarkeitsklasse des Isolierstoffs	V0
Reihenklemmen für Installationsverteiler	no

technical data

rated current	41 A
rated voltage	500 V
rated impulse voltage	6 kV
pollution degree	3
closing plate required	yes
type of insulation material	thermoplastic
length	73.5 mm

connection data

connection type 1	screw connection
connection type 2	screw connection
minimum cross section solid	0.5 mm²
maximum cross section solid	10 mm²

minimum cross section fine stranded	0.5 mm²
maximum cross section fine stranded	10 mm²
wire strip length	12 mm
torque conductor mounting	1.2 Nm

accessories

item no.	type	description
Z7.282.6229.0	jumper bar IVB WKN 6TK-2	Cross connector, insulated for DIN rail terminal blocks type WKN 6 TK..., 2 -pole
Z7.282.6329.0	jumper bar IVB WKN 6TK-3	Cross connector, insulated for DIN rail terminal blocks type WKN 6 TK..., 3 -pole
Z7.282.6429.0	jumper bar IVB WKN 6TK-4	Cross connector, insulated for DIN rail terminal blocks type WKN 6 TK..., 4 -pole
Z7.282.6529.0	jumper bar IVB WKN 6TK-5	Cross connector, insulated for DIN rail terminal blocks type WKN 6 TK..., 5 -pole
Z7.282.6629.0	jumper bar IVB WKN 6TK-6	Cross connector, insulated for DIN rail terminal blocks type WKN 6 TK..., 6 -pole
Z7.282.7229.0	cross-connector slide IVS WKN 6 TK- 2	Short-circuit plug for DIN rail terminal blocks type WKN 6 TK…, 2-pole
Z7.282.7329.0	cross-connector slide IVS WKN 6 TK- 3	Short-circuit plug for DIN rail terminal blocks type WKN 6 TK…, 3-pole
Z7.282.7429.0	cross-connector slide IVS WKN 6 TK- 4	Short-circuit plug for DIN rail terminal blocks type WKN 6 TK…, 4-pole
98.300.0000.0	mounting rail TS 35x7,5 UNPERF - l:2000mm	Mounting rail TS 35, unslotted, size 7,5 mm, length 2 m, material steel. galv. zinc-plated and passivated
98.300.1000.0	mounting rail TS 35x7,5 PERF 15mm - l:2000mm	Mounting rail TS 35, slotted, size 7,5 mm, length 2 m, material steel. galv. zinc-plated and passivated
98.300.1800.0	mounting rail TS 35x7,5 PERF 18mm - l:2000mm	Mounting rail TS 35, slotted, size 7,5 mm, length 2 m, material steel. galv. zinc-plated and passivated
98.300.1900.0	mounting rail TS 35x7,5 PERF 25mm - l:2000mm	Mounting rail TS 35, slotted, size 7,5 mm, length 2 m, material steel. galv. zinc-plated and passivated
98.360.0000.0	mounting rail TS 35x15-2,3 UNPERF - l:2000mm	Mounting rail TS 35, unslotted, size 15 mm, length 2 m, material steel. galv. zinc-plated and passivated
98.360.0004.0	mounting rail TS 35x15-2,3 UNPERF FZN - l:2000mm	Mounting rail TS 35, unslotted, size 15 mm, length 2 m, material steel, hot galvanized
98.370.0000.0	mounting rail TS 35x15 UNPERF - l:2000mm	Mounting rail TS 35, unslotted, size 15 mm, length 2 m, material steel. galv. zinc-plated and dichromated
98.370.1000.0	mounting rail TS 35x15 PERF 15mm - l:2000mm	Mounting rail TS 35, slotted, size 15 mm, length 2 m, material steel. galv. zinc-plated and passivated
98.380.0000.0	mounting rail TS 35x15-2,3 UNPERF CU - l:2000mm	Mounting rail TS 35, unslotted, size 15 mm, length 2 m, material E copper
07.312.0453.0	partition TW 6 TK	Partition for DIN rail terminal blocks type WKN 6 TK..., color: grey
07.313.1755.0	end plate APN 6 TK	End plate for DIN rail terminal blocks type WKN 6 TK..., color: grey
04.242.8053.0	marking tag strips 9705 A / 8 / 10	Marking tag strips for DIN rail terminal blocks type 9700 A / 8…, 10 tags per strip, color: blue, unmarked, markable with Wieplot plotter-system