product data sheet

item no. 58.504.6155.0

## neutral disconnect teminal WT 4 NT

Neutral disconnect terminal with Screw connection for mounting on TS 35, nominal cross section: 4 mm², width: 6 mm, color: blue

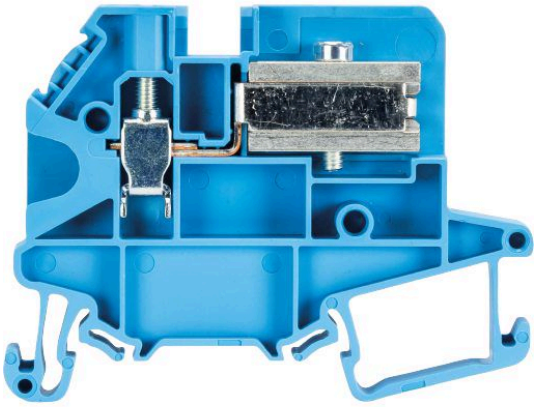

| | |
|---|---|
| item no. | 58.504.6155.0 |
| EAN | 4049088241741 |
| order unit | 100 piece(s) |

## certificates / approvals

## technical data

**general**

| | |
|---|---|
| nominal cross section | 4 mm² |
| color | blue |
| number of levels | 1 |
| number of clamp positions per level | 1 |
| width/grid dimension | 6 mm |
| inflammability class of insulation material acc. with UL94 | V0 |
| mounting method | DIN rail (top hat rail) 35 mm |
| terminal blocks for electrical installations | yes |
| Anzahl der Klemmstellen je Etage | 1 |
| Montageart | DIN rail (top hat rail) 35 mm |
| Brennbarkeitsklasse des Isolierstoffs | V0 |
| Reihenklemmen für Installationsverteiler | yes |

**technical data**

| | |
|---|---|
| rated current | 32 A |
| rated voltage | 400 V |
| rated impulse voltage | 6 kV |
| pollution degree | 3 |
| connecting plate required | yes |
| type of insulation material | thermoplastic |
| length | 62.6 mm |

**connection data**

| | |
|---|---|
| connection type 1 | screw connection |
| minimum cross section solid | 0.14 mm² |
| maximum cross section solid | 6 mm² |
| minimum cross section fine stranded | 0.14 mm² |
| maximum cross section fine stranded | 6 mm² |

| | |
|---|---|
| minumum conductor cross section (flex., stranded) with cable end sleeve | 0.5 mm² |
| maximum conductor cross section (flex., stranded) with cable end sleeve | 4 mm² |
| wire strip length | 9 mm |
| torque conductor mounting | 0.5 Nm |
| for N-busbar | 3x10 mm |

technical drawing

These dimensions will be especially checked at delivery
Only inspection dimensions
With /E marked dimensions are only valid for internal use

Diese Maße werden bei Abnahme besonders geprüft
Ausschließlich Prüfmaße
Mit /E gekennzeichnete Maße sind nur für interne Zwecke gültig

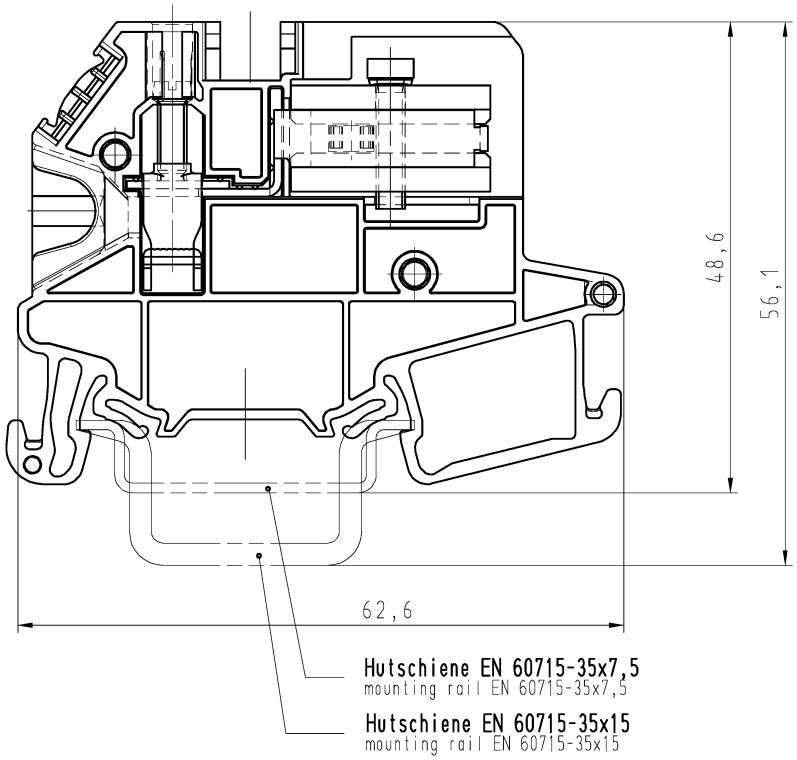


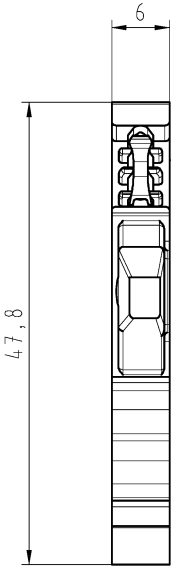


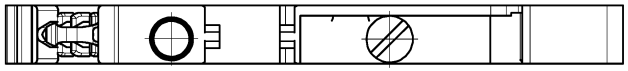

Weitergabe sowie Vervielfältigung dieses Dokuments, Verwertung und Mitteilung seines Inhalts sind verboten, soweit nicht ausdrücklich gestattet.
The reproduction, distribution and utilization of this document as well as the communication of its contents to others without express authorization is prohibited.

Tolerierung Size ISO 14405Ⓔ/Tolerance system Size ISO 14405Ⓔ.
(This ISO-standard describes the envelope principle. According to the envelope principle the deviations of form and parallelism are limited by the size tolerances).

ja/yes ☒ Stoffverbots- und Deklarationsliste nach WN 5020.010 ist einzuhalten. Conformity with Wieland document WN 5020.010 e (list of prohibited / declarable hazardous substances) to be declared!

Freitoleranz nach
General tolerance

CAD - Zeichnung, keine manuellen Änderungen
CAD - drawing, no manual modifications allowed

1.Verwendung: -
First Use:

Blatt: 1 von 1
Sheet: 1 of 1

| | | | | | | | |
|---|---|---|---|---|---|---|---|
| / | | Werkstoff/Material | 2014 | Tag/Date | Name | Zeichnung Nr./Drawing No. | Index |
| / | | | gezeichnet drawn | 20.10. | Süß Ch. | 58.504.6155.0 01K | |
| / | Maßstab/Scale | | geprüft checked | - | - | | |
| / | 2:1 | | Normgepr. Stand. check | - | - | Maße in mm/Dimensions are in mm | |
| / | Vol. mm³ | Ofl./Surf. mm² | Ersatz für/Replacement for: - | | | | |
| / | | | Type | Benennung/Title | | | |
| / | wieland | | WT 4 NT | NEUTRALLEITER_TRENNKLEMME | | | |
| Index / Datum / Blatt Date / Sheet | www.wieland-electric.com | | | Neutral disconnect terminal 400 V 4 mm² | | | |
| Änderung/Revision | | | | | | | |

585046155001K_2 CADW3012 Suess 2014-10-20T11:06:12 1:2000

QU-MEE-01/14 -