product data sheet

item no. 70.344.0636.0

bottom EX GUT GR 6 M25 09IA Z0

Bottom-base revos Ex made of zinc, for double locking lever with cable gland M25 on the left and right side, with protective cover (IP54), low version, 6-polig, explosion-tested version



item no.	70.344.0636.0
EAN	4015573740488
order unit	1 piece(s)

certificates / approvals

technical data

general

housing material	die-cast zinc
color	blue
surface	with powder coating
operating temperature range min.	-20 °C
operating temperature range max.	60 °C

model

construction	6
model of the housing	female
locking mechanism	single locking lever
cable entry	sideways
type of cable	gland nut
with cable screw gland	yes
thread size M	25
thread size PG	
EMC-version	no
length	84 mm
width	52 mm
height	73 mm

technical drawing

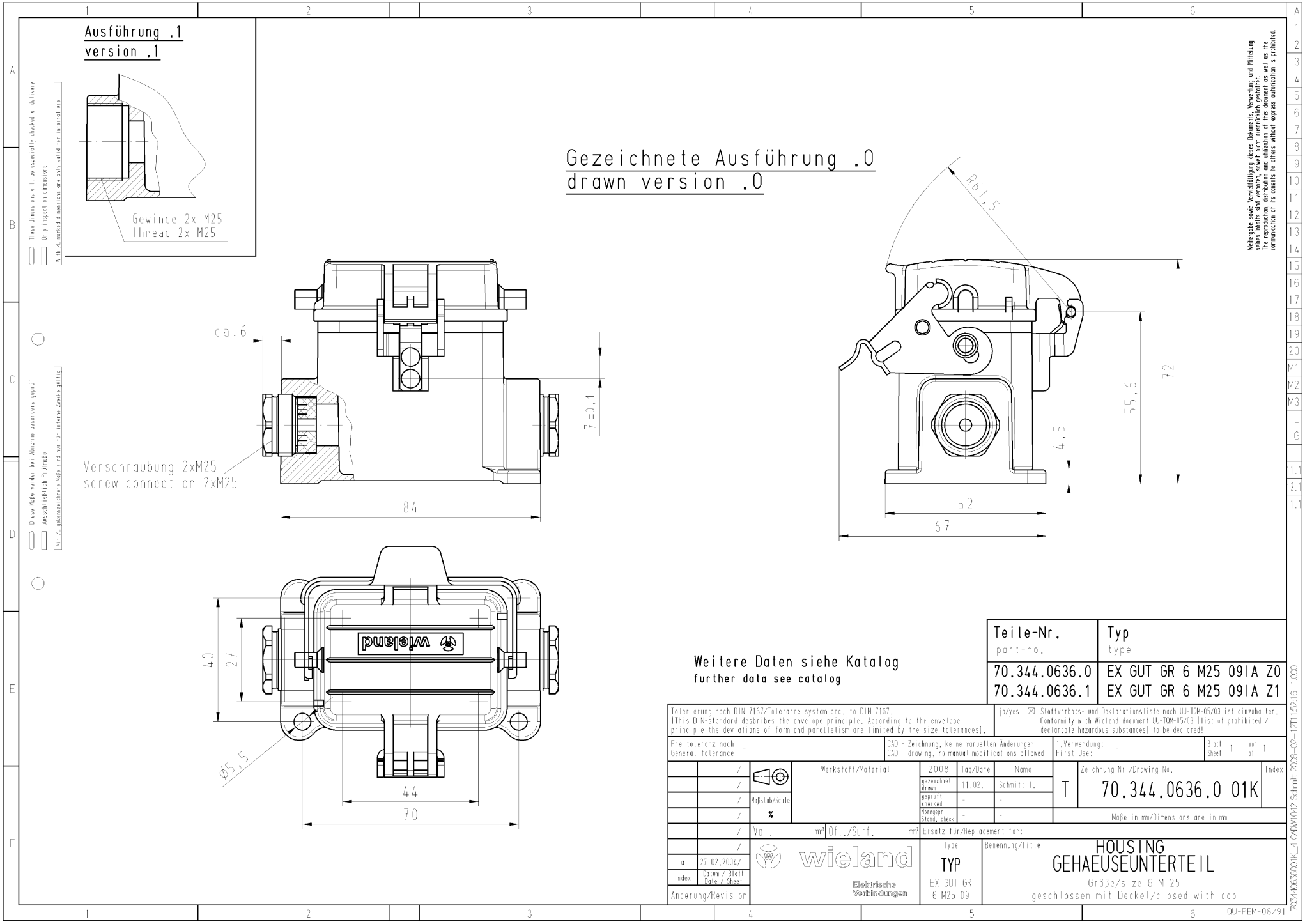

Weitergabe sowie Vervielfältigung dieses Dokuments, Verwertung und Mitteilung seines Inhalts sind verboten, soweit nicht ausdrücklich gestattet.
The reproduction, distribution and utilization of this document as well as the communication of its contents to others without express authorization is prohibited.