product data sheet

item no. 92.953.5053.1

connector GST18I5S B1 ZR2 SW

gesis® CLASSIC connector, number of poles 5, female, connection type screw connection, rated voltage 250 V / 400 V, rated current 20 A, cable diameter 11.5 - 15.5 mm, color of coding/ contact carrier black

item no.	92.953.5053.1
EAN	4049088276651
order unit	50 piece(s)

certificates / approvals

technical data

general

rated current	20 A
rated voltage	250 V / 400 V
rated impulse voltage	4 kV
strain relief	yes
pollution degree	2
mechanical coding	code 1
lockable	self-locking (unlocking by tool)
color of coding/ contact carrier	black
Pole codification	3, N, PE, 2, 1
color of housing inclusive strain relief	black
RAL-Nummer Codierung/Kontakteinsatz	9005

connection data

cable diameter max.	15.5 mm
cable diameter min.	11.5 mm
connection cross section solid mm² max.	4 mm²
connection cross section solid mm² min.	0.75 mm²
connection cross section fine stranded mm² max.	4 mm²
connection cross section fine stranded mm² min.	0.75 mm²
terminations per pole	1

model

model	female
connection type	screw connection
degree of protection (IP)	IP40
remark to type of connection	fine stranded wires 4 mm² only without ferrules

material

housing material	polyamide
halogen free	yes
contact material	CuZn

fire load	0.179 kWh/St
insulation components continous temperature	100 °C
surface finish	silver-plated

dimensions

length	84.4 mm
width	47.8 mm
height	17.5 mm

accessories

item no.	type	description
05.587.3156.0	lock (G)ST18 WS	Locking device for cable to cable connection GST18i3-5, white
05.587.3156.1	lock (G)ST18 SW	Locking device for cable to cable connection GST18i3-5, black
05.564.5353.0	cover cap GST18I3/4/5 SW	Cover piece 12 pole black for female parts GST18i3-6
05.564.5353.2	cover cap GST18I3/4/5 WS	Cover piece 12 pole white for female parts GST18i3-6
05.566.9253.0	cover cap GST18I5 BUCHSEN	Cover for female connectors GST18i5, black

assembly

item no.	type	description
92.054.0058.1	device connector GST18I5L S1H SW	gesis® CLASSIC device connector, solder connector, horizontal, without fastening flange, number of poles 5, model male, connection type soldering connection, rated voltage 250 V / 400 V, rated current 20 A, color of coding/ contact carrier black
92.257.1000.1	cable assembly GST18I5KSBS 15 10SW	gesis® CLASSIC connecting cable, female - male, number of poles 5, rated voltage 250 V / 400 V, rated current 16 A, cable type H05VV-F, fire class Eca, total length 1 m, nominal cross section conductor 1.5 mm², color of coding/ contact carrier black
92.257.1003.1	cable assembly GST18I5K1B- 15 10SW	gesis® CLASSIC connection cable, female - free end, number of poles 5, rated voltage 250 V / 400 V, rated current 16 A, cable type H05VV-F, fire class Eca, total length 1 m, nominal cross section conductor 1.5 mm², color of coding/ contact carrier black
92.257.1004.1	cable assembly GST18I5KS-S 15 10SW	gesis® CLASSIC connection cable, male - free end, number of poles 5, rated voltage 250 V / 400 V, rated current 16 A, cable type H05VV-F, fire class Eca, total length 1 m, nominal cross section conductor 1.5 mm², color of coding/ contact carrier black

technical drawing

Auslieferungszustand: unmontiert
/delivery condition: unmounted

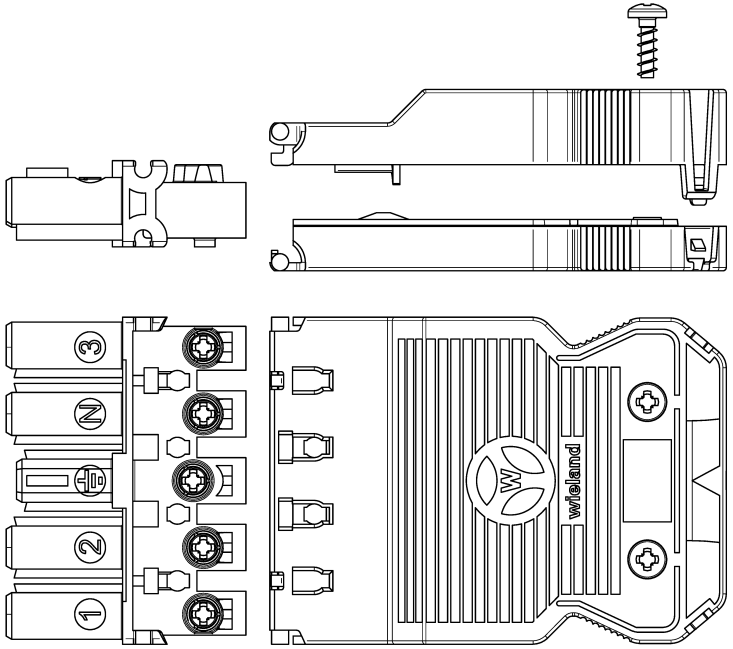

montierter Zustand
/mounted state

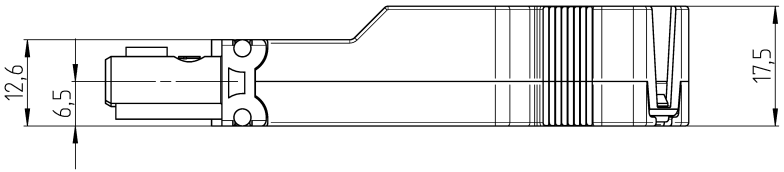

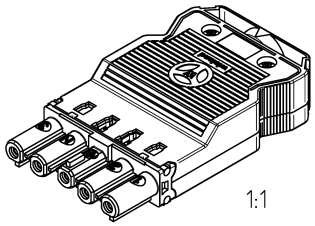

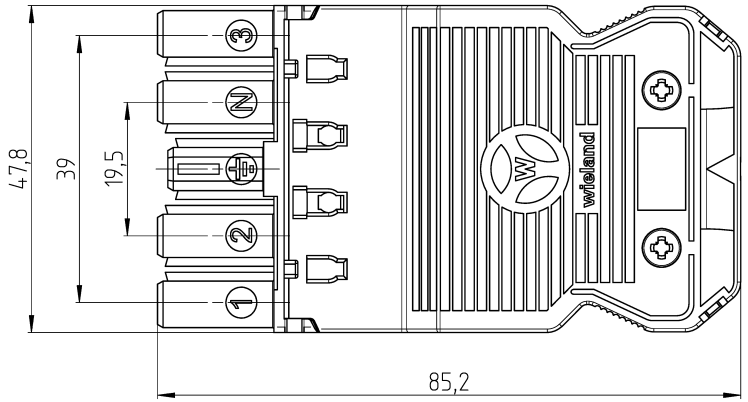

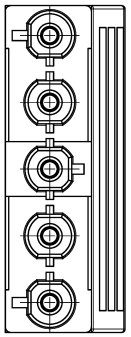

Teile-Nr. /part-no.	Farbe /colour	Typ /type
92.953.5053.0	weiß ähnl. RAL 9003 /white sim. RAL 9003	GST18I5S B1 ZR2 WS
92.953.5053.1	schwarz ähnl. RAL 9005 /black sim. RAL 9005	GST18I5S B1 ZR2 SW

Weitere Daten siehe KATALOG oder eKatalog additional data see CATALOG or eCATALOG | www.wieland-electric.com eshop.wieland-electric.com

Tolerierung Size ISO 14405 Ⓔ / Tolerance system Size ISO 14405 Ⓔ.
(This ISO-standard describes the envelope principle. According to the envelope principle the deviations of form and parallelism are limited by the size tolerances).

ja/yes ☒ Stoffverbots- und Deklarationsliste nach WN 5020.010 ist einzuhalten. Conformity with Wieland document WN 5020.010 e (list of prohibited / declarable hazardous substances) to be declared!

Freitoleranz nach General tolerance

CAD - Zeichnung, keine manuellen Änderungen CAD - drawing, no manual modifications allowed

1. Verwendung: First Use:

Blatt: Sheet: 1 von of 1

Maßstab / Scale 2:1

Werkstoff / Material
Farbe /colour:
siehe Tabelle
/see table

	Tag/Date	Name
gezeichnet drawn	07.11.2025	Gähl M.

Elektronische Freigabe
Electronic Release

Zeichnung Nr. / Drawing No.: T 92.953.5053.0 13K

Index

Maße in mm / Dimensions are in mm

Vol. mm³ Qfl./Srf. mm² Ersatz für / Replacement for:

Type

Benennung/Title

BUCHSENTEIL+ZE
/female connector with strain relief
250/400V AC 20A 2,5mm²

wieland

Index | Datum / Blatt Date / Sheet | Änderung / Revision

2025-11-07 09:32:51 1.000

01-QU-RD-32/21

© Alle Rechte vorbehalten © All rights reserved
Vertraulichkeitsstufe Confidentiality Class. Vertrauliches Confidential

These dimensions will be strongly checked at delivery
Diese Maßen werden bei Abnahme besonders geprüft
Mm. A. wegen gleichzeitiger Abnahme sind sie auch für andere Aufteile gültig.
Aufteilbarkeit Pitmaß
Mm. A. gesamtzusammen Maße sind sie auch für andere Aufteile gültig.