product data sheet

item no. 92.207.4003.0

cable assembly GST18I4KSB- 15 40TR01

gesis® CLASSIC connection cable, female - free end, number of poles 4, rated voltage 250 V / 400 V, rated current 16 A, cable type H05VV-F, fire class Eca, total length 4 m, nominal cross section conductor 1.5 mm², color of coding/ contact carrier tomato red

item no.	92.207.4003.0
EAN	4049088314735
order unit	15 piece(s)

certificates / approvals

technical data

general

rated current	16 A
rated voltage	250 V / 400 V
rated impulse voltage	4 kV
pollution degree	2
mechanical coding	code 2
continuity resistor	46 mOhm
lockable	self-locking (unlocking by tool)
color of coding/ contact carrier	tomato red
Pole codification	2, N, PE, 1
color of housing inclusive strain relief	black

model

nominal cross section conductor	1.5 mm²
degree of protection (IP)	IP40
wire strip length	9 mm
sheath strip length	35 mm
preparation of conductor ends	ultrasonically compressed wire ends
cable type	H05VV-F
cable color	black
cable diameter max.	9.2 mm
version of cable	female - free end
type of cord set	connection cable
version cable end 1	GST18i4 female
version cable end 2	free end

material

surface finish	tin-plated
halogen free	no
continuous temperature of cable	60 °C
insulation components continous temperature	100 °C
fire load	1.833 kWh/St
fire class	Eca

dimensions

total length	4 m

accessories

item no.	type	description
05.587.3156.0	lock (G)ST18 WS	Locking device for cable to cable connection GST18i3-5, white
05.587.3156.1	lock (G)ST18 SW	Locking device for cable to cable connection GST18i3-5, black
05.564.5353.0	cover cap GST18I3/4/5 SW	Cover piece 12 pole black for female parts GST18i3-6
05.564.5353.2	cover cap GST18I3/4/5 WS	Cover piece 12 pole white for female parts GST18i3-6
05.566.9153.0	cover cap GST18I4 BUCHSEN	Cover for female connectors GST18i4, black

technical drawing

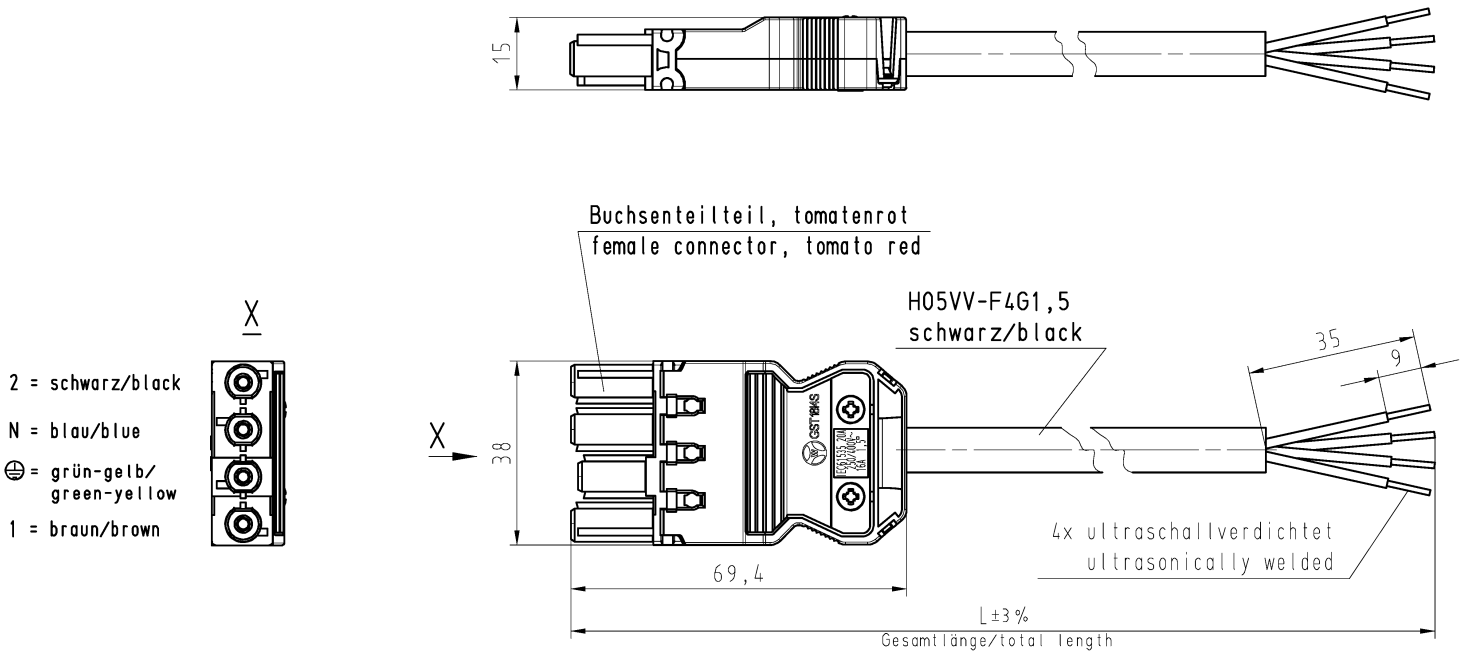

These dimensions will be especially checked at delivery
Only inspection dimensions
With /E marked dimensions are only valid for internal use

Diese Maße werden bei Abnahme besonders geprüft
Ausschließlich Prüfmaße
Mit /E gekennzeichnete Maße sind nur für interne Zwecke gültig

Weitergabe sowie Vervielfältigung dieses Dokuments, Verwertung und Mitteilung seines Inhalts sind verboten, soweit nicht ausdrücklich gestattet. The reproduction, distribution and utilization of this document as well as the communication of its contents to others without express autorization is prohibited.

Teile-Nr. part-no.	L	Beispiel (Farbe: tomatenrot) exampel (colour: tomato red)	Typ type
92.207.XX03.0	XX in dm-Schritten	92.207.1003.0 = 10dm/L= 1000mm	GST18I4KSB- 15 10TR01
U2.207.XX03.0	XX in m-Schritten	U2.207.1203.0 = 12 m/L=12000mm	GST18I4KSB- 15 X12TR01

Weitere Daten siehe KATALOG oder eKatalog.
Additional data see CATALOG or eCatalog.

www.wieland-electric.com
eshop.wieland-electric.com

Tolerierung Size ISO 14405Ⓔ/Tolerance system Size ISO 14405Ⓔ.
(This ISO-standard describes the envelope principle. According to the envelope principle the deviations of form and parallelism are limited by the size tolerances).

ja/yes ☒ Stoffverbots- und Deklarationsliste nach WN 5020.010 ist einzuhalten. Conformity with Wieland document WN 5020.010 e (list of prohibited / declarable hazardous substances) to be declared!

Freitoleranz nach
General tolerance

CAD - Zeichnung, keine manuellen Änderungen
CAD - drawing, no manual modifications allowed

1.Verwendung: -
First Use:

Blatt: 1 von 1
Sheet: 1 of 1

/	Werkstoff/Material	2015	Tag/Date	Name	T	Zeichnung Nr./Drawing No.	Index
/		gezeichnet drawn	29.05.	Dütsch T.		92.207.0503.0 01K	
/	Maßstab/Scale	geprüft checked	-	-			
/	1:1	Normgepr. Stand. check	-	-		Maße in mm/Dimensions are in mm	
/	Vol. mm³ Ofl./Surf. mm²	Ersatz für/Replacement for: -					
/	wieland	Type	Benennung/Title				
/	www.wieland-electric.com	GST18I4 KSB- 15 ...TR01	PRE-ASSEMBLED CABLE KONFEKT_LEITUNG Buchse/female - freies Ende/free end Schraubanschluss/screw connection 250V 1,5qmm				

Index | Datum / Blatt Date / Sheet
Änderung/Revision

92_207_0503_0_01K_1 CADW3027 Duetsch 2015-05-29T13:36:20 1.000

QU-MEE-01/14 -