product data sheet

item no. 92.231.0564.2

cable assembly GST18I3K1-S 10H 05WS

gesis® CLASSIC connection cable, male - free end, number of poles 3, rated voltage 250 V, rated current 6 A, cable type H05Z1Z1-F, fire class Eca, total length 0.5 m, nominal cross section conductor 1 mm², color of coding/ contact carrier white



item no.	92.231.0564.2
EAN	4049088329753
order unit	100 piece(s)

certificates / approvals

technical data

general

rated current	6 A
rated voltage	250 V
rated impulse voltage	4 kV
pollution degree	2
mechanical coding	code 1
continuity resistor	9.05 mOhm
lockable	self-locking (unlocking by tool)
color of coding/ contact carrier	white
Pole codification	L, N, PE
color of housing inclusive strain relief	white

model

nominal cross section conductor	1 mm²
degree of protection (IP)	IP40
wire strip length	9 mm
sheath strip length	37 mm
preparation of conductor ends	ultrasonically compressed wire ends
cable type	H05Z1Z1-F
cable color	white
cable diameter max.	8.6 mm
version of cable	male - free end
type of cord set	connection cable
version cable end 1	free end
version cable end 2	GST18i3 plug

material

surface finish	tin-plated
halogen free	yes

continuous temperature of cable	70 °C
insulation components continous temperature	100 °C
fire load	0.2 kWh/St
fire class	Eca

dimensions

total length	0.5 m

accessories

item no.	type	description
05.587.3156.0	lock (G)ST18 WS	Locking device for cable to cable connection GST18i3-5, white
05.587.3156.1	lock (G)ST18 SW	Locking device for cable to cable connection GST18i3-5, black
06.560.0300.0	mounting part GST18I3 SW	Lock system to provide accidental disconnection of "flying donnections" and to fix these connections to cable ladders or cable trays. Reduction of shearing forces on the strain reliefs Colour: black
06.561.7853.0	mounting frame GST18I3 SW	Mounting frame to snap in GST18i3 connectors into a housing or furniture. Wall thickness: 1,5-2,5 mm. Holds GST18i3 connectors with screw or spring connection and pre- assembled cables.
05.561.3653.0	cover cap GST18I3VS B WS	Cover piece for female GST18i3, white
05.561.3653.1	cover cap GST18I3VS B SW	Cover piece for female GST18i3, black
05.564.5353.0	cover cap GST18I3/4/5 SW	Cover piece 12 pole black for female parts GST18i3-6
05.564.5353.2	cover cap GST18I3/4/5 WS	Cover piece 12 pole white for female parts GST18i3-6
05.594.4250.0	cover cap ST18/3B + GST18I3 ST WS	
05.594.4253.0	cover cap ST18/3B + GST18I3 ST WS	

technical drawing

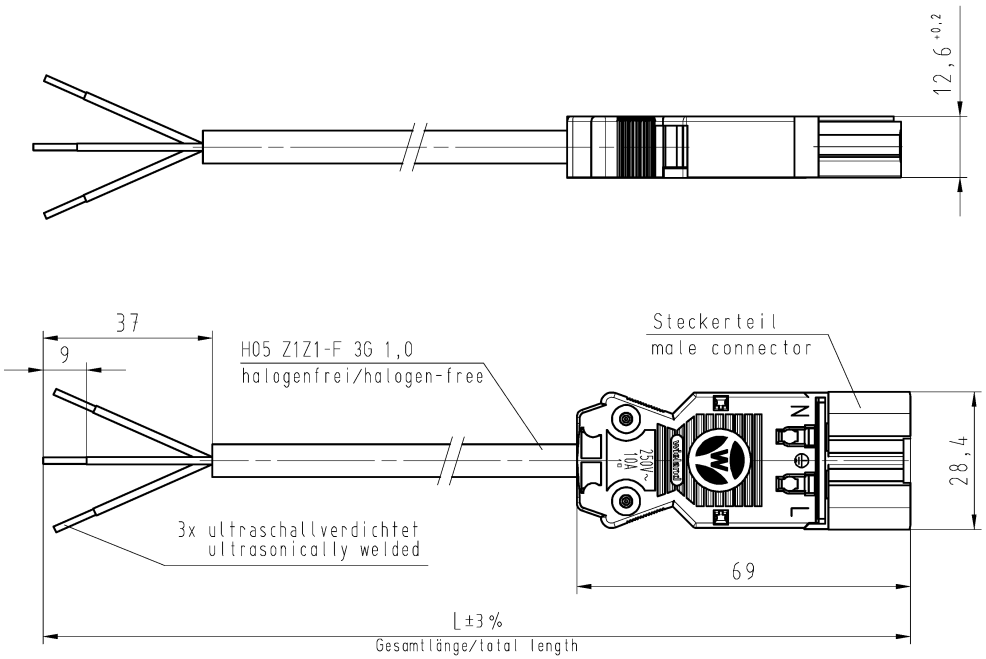

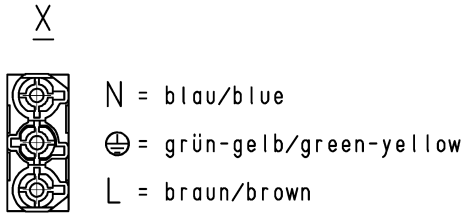

These dimensions will be especially checked at delivery
Only inspection dimensions
With /E marked dimensions are only valid for internal use

Diese Maße werden bei Abnahme besonders geprüft
Ausschließlich Prüfmaße
Mit /E gekennzeichnete Maße sind nur für interne Zwecke gültig

Weitergabe sowie Vervielfältigung dieses Dokuments, Verwertung und Mitteilung seines Inhalts sind verboten, soweit nicht ausdrücklich gestattet. The reproduction, distribution and utilization of this document as well as the communication of its contents to others without express autorization is prohibited.

.F	Farbe colour
.1	schwarz black
.2	weiß white

Teile-Nr. part-no.	L	Beispiel (Farbe: schwarz) exampel (colour: black)	Typ type
92.231.XX64.F	XX in dm-Schritten	92.231.1064.1 = 10dm/L= 1000mm	GST18I3K1-S 10H 10SW
U2.231.XX64.F	XX in m-Schritten	U2.231.1264.1 = 12 m/L=12000mm	GST18I3K1-S 10H X12SW

Weitere Daten siehe KATALOG oder eKatalog.
Additional data see CATALOG or eCatalog.

www.wieland-electric.com
eshop.wieland-electric.com

Tolerierung Size ISO 14405Ⓔ/Tolerance system Size ISO 14405Ⓔ.
(This ISO-standard describes the envelope principle. According to the envelope principle the deviations of form and parallelism are limited by the size tolerances).

ja/yes ☒ Stoffverbots- und Deklarationsliste nach WN 5020.010 ist einzuhalten. Conformity with Wieland document WN 5020.010 e (list of prohibited / declarable hazardous substances) to be declared!

Freitoleranz nach
General tolerance

CAD - Zeichnung, keine manuellen Änderungen
CAD - drawing, no manual modifications allowed

1.Verwendung: -
First Use:

Blatt: 1 von 1
Sheet: 1 of 1

Werkstoff/Material

Maßstab/Scale 1:1

2015	Tag/Date	Name
gezeichnet drawn	16.10.	Dütsch T.
geprüft checked	-	-
Normgepr. Stand. check	-	-

T

Zeichnung Nr./Drawing No. 92.231.0264.1 01K

Index

Maße in mm/Dimensions are in mm

Vol. mm³ Ofl./Surf. mm²

Ersatz für/Replacement for: -

Index | Datum / Blatt Date / Sheet

Änderung/Revision

wieland
www.wieland-electric.com

Type GST18I3 K1-S 10H ...

Benennung/Title
PRE-ASSEMBLED CABLE
KONFEKT_LEITUNG
Stecker - freies Ende Crimpversion K1
250V AC 10A 1,0qmm

92_231_0264_1_01K_1 CADW3027 Duetsch 2015-10-16T11:10:38 1.000

QU-MEE-01/14 -