wieland

samos® PRO

samos® PRO-Hardware

Manual

Doc no. BA000966

Last Update: 06/2024 [11233]

INFO

Copyright

This document is copyright-protected. The rights derived from this copyright are reserved for Wieland Electric. Reproduction of this document or parts of this document is only permissible within the limits of the statutory provision of the Copyright Act. Any modification or abridgment of the document is prohibited without the express written agreement of Wieland Electric.

samos® is a registered trademark of WIELAND Electric GmbH.

Allen-Bradley, CompactBlock Guard I/O, CompactLogix, ControlFLASH, ControlLogix, DH+, FactoryTalk, FLEX, GuardLogix, Kinetix, Logix5000, MicroLogix, PanelBuilder, PanelView, PhaseManager, PLC-2, PLC-3, PLC-5, POINT I/O, POINT Guard I/O, Rockwell Automation, Rockwell Software, RSBizWare, RSFieldbus, RSLinx, RSLogix 5000, RSNetWorx, RSView, SLC, SoftLogix, Stratix, Stratix 2000, Stratix 5700, Stratix 6000, Stratix 8000, Stratix 8300, Studio 5000, Studio 5000 Logix Designer, SynchLink, and Ultra are registered trademarks of Rockwell Automation, Inc.

ControlNet, DeviceNet, and EtherNet/IP are registered trademarks of ODVA, Inc.

TwinCAT is a registered trademark of Beckhoff Automation GmbH.

EtherCAT is a registered trademarks and a technology licensed by Beckhoff Automation GmbH.

Microsoft, Windows 10, Windows 11 and .NET Framework are registered trademarks of the Microsoft Corporation.

Any other product or trade names listed in this manual are the trademarks or registered trademarks of the respective owners.

Subject to change

Subject to technical changes for reasons of continued development.

TABLE OF CONTENTS

1 About this manual 8
1.1 Function of this document 8
1.2 Target group 8
1.3 Information depth 9
1.4 Scope of validity and applicable documents 9
1.5 Abbreviations used 10
1.6 Symbols/icons and writing style/spelling standard used 11
2 Safety 12
2.1 Proper use 12
2.2 Areas of application of the device 12
2.3 Qualified persons 13
2.4 Special obligations of the operator 14
3 Product description 15
3.1 Brief overview 15
3.2 System setup 16
3.3 Version, compatibility, and features 18
3.3.1 What's new? 19
3.4 Controller module 20
3.4.1 Controller module SP-COP1 20
3.4.1.1 Description 20
3.4.1.2 Display elements, interfaces and terminal description 20
3.4.1.3 Internal circuits 21
3.4.1.4 Limited short-circuit detection in the input circuits 22
3.4.1.5 Deactivating the test pulses at the outputs 22
3.4.1.6 Single-channel use of outputs 23
3.4.2 Controller module SP-COP2-EN 24
3.4.2.1 Description 24
3.4.2.2 Display elements, interfaces and terminal description 24
3.4.2.3 Internal circuits 25
3.4.2.4 Limited short-circuit detection in the input circuits 26
3.4.2.5 Deactivating the test pulses at the outputs 27
3.4.2.6 Single-channel use of outputs 27
3.4.3 Controller module SP-COP2-ENI 28
3.4.3.1 Description 28
3.4.3.2 Display elements, interfaces and terminal description 28
3.4.3.3 Internal circuits 28
3.4.3.4 Limited short-circuit detection in the input circuits 28
3.4.3.5 Deactivating the test pulses at the outputs 29
3.4.3.6 Single-channel use of outputs 29
3.4.4 Controller modules SP-COP2-EN-M and SP-COP2-ENI-M 31
3.4.4.1 Description 31
3.4.4.2 Display elements, interfaces and terminal description 31
3.4.4.3 Internal circuits 31

3.4.4.4 Limited short-circuit detection in the input circuits 31
3.4.4.5 Deactivating the test pulses at the outputs 32
3.4.4.6 Single-channel use of outputs 32
3.5 SP-COP-CARD1 removable storage 34
3.5.1 Description 34
3.5.2 Files on the removable storage 34
3.6 SP-SDIO input/output expansion module 36
3.6.1 Description 36
3.6.2 Display elements and terminal assignment 36
3.6.3 Internal circuits 38
3.6.4 Deactivating the test pulses at the outputs 39
3.6.5 Single-channel use of outputs 39
3.7 SP-SDI input/output expansion module 40
3.7.1 Description 40
3.7.2 Display elements and terminal assignment 41
3.7.3 Internal circuits 42
3.8 SP-DIO input/output expansion module 43
3.8.1 Description 43
3.8.2 Display elements and terminal assignment 45
3.8.3 Internal circuits 46
3.9 Analog extended input module SP-SAC4 48
3.9.1 Description 48
3.9.2 Display elements and terminal assignment 49
3.10 Analog extended input module SP-SAR4 49
3.10.1 Description 49
3.10.2 Display elements and terminal assignment 50
3.11 Analog extended input module SP-SACR22 50
3.11.1 Description 50
3.11.2 Display elements and terminal assignment 51

4 Connection of sensors and actuators 52

4.1 Safety command devices and electromechanical safety switches 54
4.1.1 Emergency stop button 54
4.1.2 Electromechanical safety switch without lock 54
4.1.3 Electromechanical safety switch with lock 55
4.1.4 Enable switch 55
4.1.5 Two-hand control 56
4.1.5.1 Type IIIA 56
4.1.5.2 Type IIIC 56
4.1.6 Safety mats and bumper 57
4.1.7 Connection of multiple safety mats/bumpers 59
4.1.8 Operation mode selection switch 59
4.1.9 Potential-free contacts 59
4.2 Contactless safety sensors 59
4.2.1 Magnetic safety switches 59
4.2.1.1 Magnetic safety switches with equivalent inputs 59
4.2.1.2 Magnetic safety switches with complementary inputs 60

4.2.2	Inductive safety switches	60
4.2.3	Transponder switches	61
4.3	Testable single-beam safety light barriers	62
4.3.1	Testable type 2 single-beam safety light barriers	62
4.3.2	Testable type 4 single-beam safety light barriers	62
4.3.3	Customer-specific testable single-beam safety light barriers	63
4.3.4	Information on installing testable single-beam safety light barriers	63
4.4	BWS – Contactless Safety Devices	65
4.5	Motion monitoring	65
4.5.1	Sensors and hardware	66
4.5.1.1	Basic information on proximity sensors and toothed discs	66
4.5.1.2	Sensor requirements	67
4.5.1.3	Connection and wiring	73
4.5.2	Sensors and attainable safety level	83
4.5.2.1	General information	83
4.5.2.2	Proximity sensor A	87
4.5.2.3	Proximity sensor A, A/	90
4.5.2.4	2 proximity sensors A, B (sensor pair)	93
4.5.2.5	Proximity sensors A, A/, B, B/	97
4.5.2.6	Standard HTL incremental encoder with 2 tracks A, B	100
4.5.2.7	Standard HTL incremental encoder with 4 tracks A, A/, B, B/	104
4.5.2.8	Safe SENC HTL encoder with 2 tracks A ,B	106
4.5.2.9	Safe SENC HTL encoder with antivalent signals A, A/, B, B/	108
4.6	Analog sensors	111
4.6.1	Connection and wiring	111
4.6.1.1	Current sensor	111
4.6.1.2	Temperature sensor	113
4.7	Safety outputs	114
5	Special functions	115
5.1	Muting	115
6	Installing/removing	116
6.1	Installation position and maximum expansion stage	116
6.2	Installing modules on DIN rails	116
6.3	Removing modules from the DIN rail	120
7	Electrical installation	122
7.1	Requirements for electrical installation	122
7.2	Safe installation in line with EMC provisions	124
7.3	Internal wiring of the supply voltage	125
8	Configuration	126
9	Commissioning	127
9.1	Total acceptance of the application	127
9.2	Tests before initial commissioning	127

10 Diagnostics 128
10.1 What to do in the event of an error 128
10.2 Error statuses 128
10.3 Error displays of the status LEDs 129
10.3.1 Device state and LED displays in the controller modules 130
10.3.2 Device state and LED displays in the safe input/output modules 132
10.3.3 Device state and LED displays in the standard input/output modules 133
10.3.4 Device state and LED displays of analog extended input modules 134
10.4 Support 136
10.5 Expanded diagnostics 136

11 Maintenance 137
11.1 Regular testing of the safety equipment by qualified persons 137
11.2 Replacing devices 138
11.2.1 Safety measures when replacing devices 138

12 Technical data 139
12.1 Response times for basic safety functions 139
12.1.1 Minimum switch-off time 141
12.1.2 Response time of the state flag 141
12.2 Response times for motion monitoring 141
12.2.1 Safety response time of the sensors 142
12.2.2 Safety response times of the logic 142
12.2.3 Error detection times 143
12.3 Response times for analog value processing 145
12.4 Safety technology reference values 145
12.4.1 Controller modules without I/O expansion 145
12.4.2 Controller modules with safe digital I/O expansion 146
12.4.3 Controller modules with safe motion monitoring 146
12.4.4 Controller modules without safe digital I/O expansion and with safe analog input expansion 148
12.4.4.1 Analog input with current sensor and without safe output expansion 148
12.4.4.2 Analog input with resistance sensor and without safe output expansion 150
12.4.5 Controller modules with safe digital output expansion and safe analog input expansion 151
12.4.5.1 Analog input with current sensor and safe digital output expansion 151
12.4.5.2 Analog input with resistance sensor and safe digital output expansion 153
12.5 Data sheet 154
12.5.1 Controller module 154
12.5.2 Safe input/output expansion module 160
12.5.3 Safe input expansion module 164
12.5.4 Standard input/output expansion module 165
12.5.5 Safe relay extended module (not programmable) 167
12.5.6 Safe analog extended input modules 168
12.6 Dimensional drawings 171
12.6.1 Controller module 171
12.6.2 Input/output expansion modules 172

12.6.3 WKFN 2.5 E/35 GO-URL Level terminal 173

13 Order data 174

13.1 Hardware modules and accessories 174

13.2 Modules for contact expansion 179

13.3 Other safety-related products 179

14 Appendix 180

14.1 Declaration of Conformity 180

14.2 Checklist for manufacturers 180

14.3 List of all error messages, causes and aids 180

1 ABOUT THIS MANUAL

Please read this section and the *Safety [ch. 2, p. 12]* section carefully before working with the documentation or with the modular samos® PRO safety controller and the corresponding samos® PRO modules.

1.1 Function of this document

There are three manuals for the samos® PRO system with clearly delineated areas of application as well as installation instructions and brief instructions for each module.

- **This hardware manual** describes in-detail all modules that can be used with a SP-COPx controller module and their functions. Use the hardware manual mainly for designing samos® PRO safety controllers.
  This manual will guide **technical personnel of the machine manufacturer** and/or **machine operator** on safe installation, electric installation, commissioning, and maintenance of the modular samos® PRO safety controller.
  This manual does **not** provide instructions for operating the machine into which the safety controller is or will be integrated. Instructions on how to operate the machine are provided for this purpose.
- The **software manual** describes the software-supported configuration and parameterization of the samos® PRO safety controller. In addition, the software manual contains a description of the important diagnostic functions for operation and detailed information for identifying and eliminating errors. Use the software manual mainly when configuring, commissioning and operating samos® PRO safety controllers.
- The **gateway manual** describes in-detail the samos® PRO gateways and their functions.
- Each module contains the **installation instructions/brief instructions**. These instructions provide information on the fundamental technical specifications of the modules and contain simple installation instructions. Use the installation instructions/brief instructions when installing the samos® PRO safety controller.

This manual contains original operating instructions in accordance with the Machinery Directive.

1.2 Target group

This manual is intended for **designers**, **developers,** and **operators** of systems that are to be safeguarded by a modular samos® PRO safety controller.

It is also intended for persons integrating a samos® PRO safety controller into a machine, commissioning it for the first time, or maintaining such a system.

1.3 Information depth

This manual contains information on the modular samos® PRO safety controller with respect to the following topics:

- Mounting
- Electrical installation
- Hardware commissioning
- Maintenance
- Error diagnostics and error elimination
- Item numbers
- Conformity and approval

Furthermore, specialized technical knowledge that is not provided in this document is required when designing and using Wieland safety equipment.

Governmental and legal regulations must always be adhered to when operating the modular samos® PRO safety controller.

Downloads available from the Internet

Also consult our website on the Internet. At the following link www.wieland-electric.com, you will find:

- the samos® PLAN 6 software
- The samos® PRO manuals available for display and printing in various languages:
  - This hardware manual (BA000965)
  - The software manual (BA000967)
  - The gateway manual (BA000969)

1.4 Scope of validity and applicable documents

This manual is valid for all samos® PRO safety controller modules that are operated in connection with SP-COPx and samos® PLAN 6 controller modules.

Tab. 1: Overview of the samos® PRO documentation

Document	Title	Article number
Software manual	samos® PLAN 6 software	BA000967
Hardware manual	samos® PRO hardware	BA000965
Gateway manual	samos® PRO gateways	BA000969
Operating instructions	SP-COPx (Controller modules of the modular samos® PRO safety controller)	BA001119 BA001305
Operating instructions	SP-SDI/SP-SDIO Extended modules of the modular safety controller samos® PRO	BA001116
Operating instructions	SP-DIO Unsafe extended module of the samos® PRO modular safety controller	BA001190
Operating instructions	SP-SAC4/SP-SAR4/SP-SARCR22 Analog extended module of the modular safety controller samos® PRO	BA001169
Operating instructions	SP-PROFIBUS-DP Non-safe fieldbus module PROFIBUS-DP	BA001187
Operating instructions	SP-CANopen Non-safe fieldbus module CANopen	BA001188

Document	Title	Article number
Operating instructions	SP-EN-ETC Non-safe fieldbus module EtherCAT	BA001178

1.5 Abbreviations used

ESPE	Contactless protection unit, light curtain
Bypass	You can use a bypass input to set the release to 1, regardless of the system status. As a result, the calculation of the releases by the FB is overruled by the Bypass.
Logic cycle time	Processing time of the user program. Appears in the status line of samos® PLAN 6 and in the samos® PLAN 6 report
EDM	External Device Monitoring = Contact monitor
Muting	The muting input can be used to hold a current release on 1 for as long as the muting input is activated. Only the releases that were already previously set to 1 are muted.
OSSD	Output Signal Switching Device = Signal output that triggers the safety circuit
PFHd	Probability of Dangerous Failure per Hour
Process Safety Time	Predetermined total time during which the safe subsystem has to detect the need for a safe state and subsequently switch to this state.
PST	Process Safety Time
SIL	Safety Integrity Level (Safety Category)
PLC	Programmable logic controller
CPU cycle time	Internal system cycle time
Reset	User-controlled reset of an internal FB monitoring error via an FB input. A reset is only effective when the reason for the error was previously eliminated by the user. The request to press Reset is displayed in advance by the Reset required FB output.
Restart	The user can agree to a release via the Restart input. The request to press Restart is displayed in advance by the Restart required FB output. On starting the control, Restart is used to remove a startup lock.
SLS	Safely Limited Speed The *Safely Limited Speed function* SLS (EN 61800-5-2) is used when safety within the danger zone of a drive is only guaranteed up to a defined speed. The drive is monitored for a maximum permitted speed. The release output of the SLS function prevents the motor from exceeding the specified speed limit.
SSM	Safe Speed Monitor The *Safe Speed Monitor* function SSM (EN 61800-5-2) is used when safety within the danger zone of a drive is only guaranteed at a reduced speed and in a defined rotational direction. The drive is monitored for a maximum permitted speed and a defined rotational direction. If a limit is not exceeded, the release output is set.
SSR	Safe Speed Range A combination of SLS and SSM, with which upper and lower limit speeds can be monitored.

SLP	Safely Limited Position The *Safely Limited Position* function SLP (EN 61800-5-2) is used when safety within the danger zone of a drive is only guaranteed in one or several defined positions.
SDI	Safe Direction The *Safe Direction* function SDI (EN 61800-5-2) is used when the safety or function of a drive is only guaranteed in a defined direction of rotation or travel. The drive is monitored for an approved rotational direction. If a movement is detected in the opposite direction, the release output is reset.

1.6 Symbols/icons and writing style/spelling standard used

NOTICE

These are notes that provide you with information regarding particularities of a device or a software function.

WARNING

Warning!

A warning lets you know about specific or potential hazards. It is intended to protect you from accidents and help prevent damage to devices and systems.

- **Please read and follow the warnings carefully!**
  Failure to do so may negatively impact the safety functions and cause a hazardous state to occur.

Menus and commands

The names of software menus, submenus, options, and commands, selection fields, and windows are written in **bold font**. Example: Click on **Edit** in the **File** menu.

2 SAFETY

This section is intended to support your safety and the safety of the system users.

➡ Please read this section carefully before you work with a samos® PRO system.

2.1 Proper use

The modular samos® PRO safety controller is an adjustable control for safety applications.

The control may only be operated by qualified personnel and may only be used on a machine on which it has been installed and commissioned for the first time by a qualified person in accordance with this manual.

Basic conditions for use

The modular samos® PRO safety controller may only be operated under the following conditions:

- You are operating the control within the specified areas of application.
  Further information: *Areas of application of the device [ch. 2.2, p. 12]*
- You are operating the control within the specified operating limits for voltage, temperature, etc.
  See the following for further information: *Technical data [ch. 12, p. 139]*
- You are observing personnel requirements.
  Further information: *Qualified persons [ch. 2.3, p. 13]*
- You are observing the special operator obligations.
  Further information: *Special obligations of the operator [ch. 2.4, p. 14]*

Improper use

Any other use or secondary use is deemed improper and is therefore not permitted. Any warranty claims for resulting damage made against Wieland Electric GmbH shall be deemed invalid. The risk shall be borne solely by the operator.

This also applies to any independent modifications made to the device.

2.2 Areas of application of the device

Supported standards

You can operate the samos® PRO modular safety controller in safety applications according to the following standards:

- EN 61508 up to SIL 3
- EN 61131-6 up to SIL 3
- EN 62061 up to SIL CL 3
- EN ISO 13849-1:2015 up to Performance Level e / Category 4
- EN 81-20 (only for module types SP-COPx)
- EN 50156-1
  - The safety function must be tested at least once annually
  - A consistent redundant structure must be implemented
  - If relay expansion modules are used, the correct switching of the relays must be monitored using feedback contacts (EDM)
  - The requirements of EN 50156-1, Section 10.5.6, must be considered

The level of safety actually achieved depends on the external wiring, the implementation of the wiring, the parameterization, the selection of the command encoder, and their arrangement on the machine.

Opto-electronic and tactile safety sensors (e.g. light curtains, laser scanners, safety switches, sensors, emergency stop switches) are connected and logically linked to the modular safety controller. The corresponding actuators on the machine or systems can be securely switched off via the switch outputs of the safety controller.

Specifications for UL/CSA applications:

For UL/CSA applications, you can operate a samos® PRO safety controller under the following conditions:

- You use lines that are suitable for a temperature range of 60 to 75°C.
- You tighten the screw terminals with a torque of 5-7 lbs/in.
- You always operate the control in a Pollution Degree 2 environment.
- The modules must be supplied from an isolated, potential-free power source and a secondary power source of maximum 42.4 VDC, and safeguarded so that the maximum output of 100 VA is not exceeded. The fuse must either be UL listed or recognized according to UL 248. All power supply inputs must be connected to the same source.
- The maximum permissible total current for the SP-SDIO modules with outputs Q1 to Q4 is I_{total} = 3.2 A.

NOTICE

The safety functions are not evaluated by UL. The approval corresponds to UL508, general applications.

Specifications for Ethernet connections

WARNING

Restrictions for Ethernet connections

- The Ethernet connection can only be linked to autonomous networks or demilitarized zones (DMZ).
- The device must never be connected directly to the Internet.
- Always use secure data tunnels (VPN) to exchange data via the Internet.

Specifications for domestic use

If you wish to use the samos® PRO system for domestic purposes, you need to take additional steps to prevent the emission of radio frequency interference in limit class B according to EN 55011. Here are some steps you might take:

- The use of interference suppressor filters in the supply circuit
- Installation in grounded switch cabinets or boxes

2.3 Qualified persons

The modular samos® PRO safety controller may only be installed, commissioned, and maintained by qualified persons.

Qualified persons are those who

- have suitable technical training **and**
- have been trained by the machine operator in the operation and applicable safety guidelines **and**
- have access to the operating instructions and have read and duly noted said instructions **and**
- have access to the operating instructions for the safety devices connected to the safety controller (e.g. safety light curtain) and have read them and duly noted them.

2.4 Special obligations of the operator

WARNING

Note the safety information and protective measures.

Note the following points in order to ensure proper use of the samos® PRO safety controller.

Duty to provide instruction

- This manual must be made available for the operator of the machine on which the samos® PRO safety controller is being used. The machine operator must be trained by qualified persons and is required to read this manual.

Compliance with standards and regulations

- Please follow the standards and guidelines valid in your country when installing and using the samos® PRO safety controller.
- The national/international legal regulations apply to the installation and use of the safety controller as well as for the commissioning and repeated technical testing, particularly the following
  - Machinery Directive 2006/42/EC
  - EMC Directive 2014/30/EU
  - Work Equipment Directive 2009/104/EC
  - Low Voltage Directive 2014/35/EU
  - Accident prevention regulations/safety rules
  - RoHS (Restriction of Hazardous Substances) Directive 2011/65/EU
- Manufacturers and operators of a machine on which a samos® PRO safety controller is being used are responsible for coordinating with the proper authorities with regard to applicable safety guidelines/rules and complying with these.

Requirements for electrical installation

- All notices, particularly the inspection notices, must be observed without fail.
  Further information: *Requirements for electric installation [ch. 7.1, p. 122]*
  The tests must be conducted by qualified persons or by those who are personally authorized and commissioned to do so and must always be fully documented at all times by a third-party.
- The external power supply of the devices must be able to bridge a short-term power outage of 20 ms in accordance with EN 60204. Suitable PELV- and SELV-capable power packs can be obtained as accessories from Wieland Electric.
- The modules for the samos® PRO system correspond to class A, group 1, in accordance with EN 55011. Group 1 includes all ISM devices in which intentionally generated and/or wired HF power, which is required for the internal function of the device itself, occurs.

3 PRODUCT DESCRIPTION

This section will provide you with information on the properties of the samos® PRO system and describes the setup and function.

3.1 Brief overview

samos® PRO is a modular safety controller for machine and system construction.

Basic features

- Modular structure with:
  1 controller module and up to 12 input/output expansion modules, each of which has an overall width of 22.5 mm
- 16 to 116 inputs and 4 to 56 outputs
- Programmable using the samos® PLAN 6 software

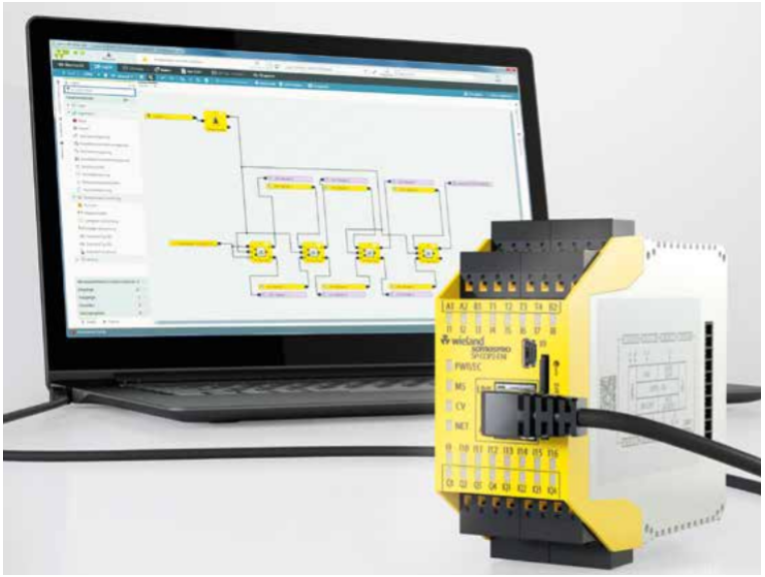

Fig. 1: Controller module with samos® PLAN 6 configuration software

Additional performance features

- Can use up to 300 standard and application-specific logical blocks
- Logic simulation
- Safe position and speed monitoring
- Safe analog value processing
- Connection to common industrial fieldbuses
- Online diagnostics

3.2 System setup

A samos® PRO system consists of the following modules and/or components:

- 1 Controller module
- 1 Program removable storage
- samos® PLAN 6 programming software
- Up to 2 gateway modules
- Up to 12 additional input/output/analog modules SP-SDIO, SP-SDI, SP-DIO, SP-SACR22, SP-SAC4, SP-SAR4
- In addition, SP-XX extension modules can be used. These could be e.g. the SNS4084K standstill monitor or the relay output extensions.
  These modules are shown in the report from samos® PLAN 6 but cannot be logically linked with the modules of the samos® PRO system.
  Further information: Software manual, chapter ""

Examples

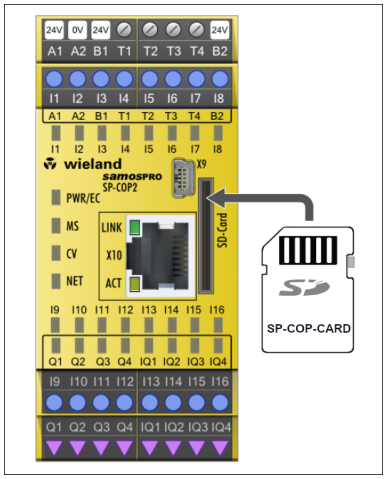

Fig. 2: Example of a minimum samos® PRO system setup with a SP-COP2-ENI-A controller module

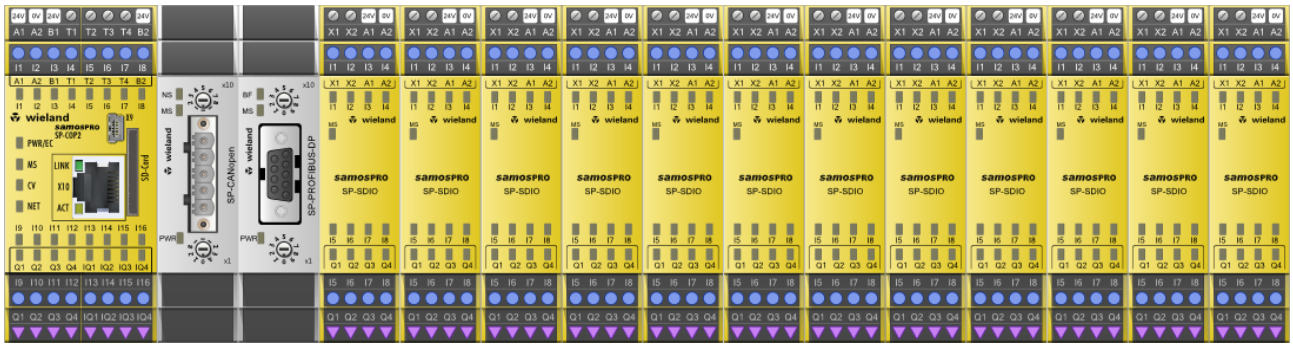

Fig. 3: Example 2 - Maximum expansion of a samos® PRO system

Nomenclature and variant overview for controller modules

samos® PRO controller modules are distinguished by functionality, communication capability and terminal type. An overview with the nomenclature is provided below to better understand the abbreviations:

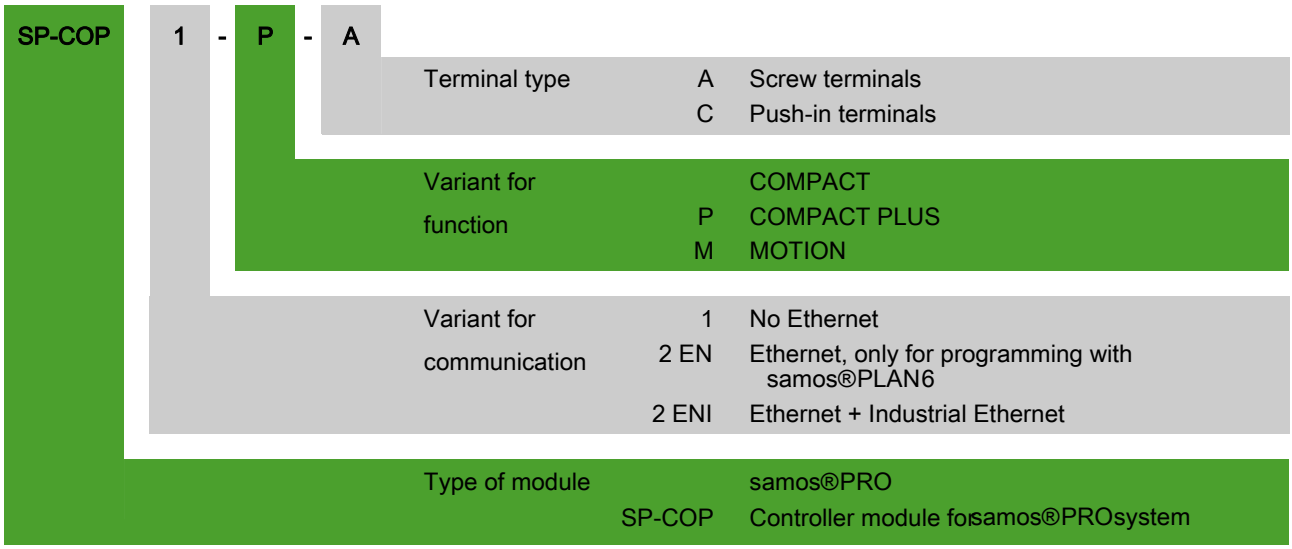

Fig. 4: Nomenclature – applies up to module version G-xx

Tab. 2: Module overview

Type	Description	Module version	Inputs	Out-puts	Config-urable inputs/ outputs	Motion in-puts	Max. number per station
SP-COP1 / SP-COP1-P	Controller module for COMPACT and COM-PACT PLUS without Eth-ernet	Up to G-xx	20	4			1×
SP-COP2-EN / SP-COP2-ENI	Controller modules for COMPACT and COM-PACT PLUS with Ether-net		16	4	4		1×
SP-COP2-EN-P / SP-COP2-ENI-P	Controller modules for COMPACT and COM-PACT PLUS with Ether-net	Up to G-xx	16	4	4		1×
SP-COP1-M	Controller module for MOTION without Ether-net	Up to G-xx	16	4		4	1×
SP-COP2-EN-M	Ethernet interface for samosPLAN6 communi-cation for MOTION.	From H-xx	12	4	4	4	1×
SP-COP2-ENI-M-x	Controller module for MOTION with Ethernet	Up to G-xx	12	4	4	4	1×
	Controller module for MOTION with Ethernet	From H-xx	12	4	4	4	1×
SP-SDIO	Input/output expansion		8			-	12×
SP-SDI	Input expansion		8	–		-	
SP-SACR22	Input expansion, analog		4	–		-	
SP-SAC4	Input expansion, analog		4	–		-	
SP-SAR4	Input expansion, analog		4	–		-	
SA-OR-S1	Relay output expansion		–	4		-	4×

Type	Description	Module version	Inputs	Out-puts	Config-urable inputs/ outputs	Motion in-puts	Max. number per station
SA-OR-S2	Relay output expansion		–	2		-	8×
SP-DIO	Standard input/output module		4	4	4	-	12×
SP-PROFIBUS-DP	PROFIBUS DP gateway		–	–		-	2×
SP-CANopen	CANopen gateway		–	–		-	
SP-EN-ETC	EtherCAT Gateway		–	–		-	

3.3 Version, compatibility, and features

There are different module versions of the controller modules that enable different station capabilities. A station capability could be the support of an extended module, a fieldbus protocol or a function library.

Tab. 3: Required controller modules and software versions for station capabilities

Station capabilities	From the build state of the controller module	Available in controller module variants	samos® PLAN 6 or later
Safe I/O modules (SP-SDIO, SP-SDI)	A-01.xx	All	V1.0.0
CANopen	A-01.xx		
PROFIBUS DP	A-01.xx		
Standard I/O module (SP-DIO)	C-01.xx		
EtherCAT (SP-EN-ETC)	C-01.xx		
Extended security functions	E-01.xx		V1.2.0
Network (programming via Ethernet)	A-01.xx	SP-COP2-EN/ENI-x SP-COP2-EN/ENI-M-x	V1.0.0
Modbus TCP	A-01.xx	SP-COP2-ENI-x SP-COP2-ENI-M-x	V1.0.0
PROFINET IO	B-01.xx		
EtherNet/IP	D-01.xx		
Press functions	D-01.xx	SP-COP1-P-x SP-COP1-M-x SP-COP2-EN-P-x SP-COP2-ENI-P-x SP-COP2-ENI-M-x	
Analog current measurement	F-01.xx		V1.3.0
Analog temperature measurement			
Combustion technology			
View and communicate internal values	F-01.xx		V1.3.5

Station capabilities	From the build state of the controller module	Available in controller module variants	samos® PLAN 6 or later
Press function, Analog current and temperature measurement, Combustion technology, View and communicate internal values	G-01.xx	SP-COP1-P-x SP-COP1-M-x SP-COP2-EN-P-x SP-COP2-ENI-P-x SP-COP2-ENI-M-x	V1.3.10
Motion monitoring	G-01.xx	SP-COP1-M-x SP-COP2-ENI-M-x	V1.4.0
Press function, Analog current and temperature measurement, Combustion technology, View and communicate internal values	G-04.02	SP-COP2-EN/ENI-x	V1.4.3
Motion monitoring	H-02.xx	SP-COP2-EN-M-x SP-COP2-ENI-M-x	V1.5.1

Info

- You can find the module version on the type plate of the modules.
- You will find the samos® PLAN 6 version in the main menu.
- The latest software version is available in the Internet at the following address www.wieland-electric.com.
- Newer modules are backwards-compatible, which means that each module can be replaced with a module having a higher module version.
- You can find the date of manufacture for a device on the type plate in the **S/N** field in the format <Product no.>yywwnnnnn (yy = year, ww = calendar week).

3.3.1 What's new?

The following existing devices have been changed to new devices with new designations from build status H-xx.

Old designation	Article number	New designation	Article number
SP-COP1-P-A	R1.190.1130.0	SP-COP2-EN-A	R1.190.1210.0
SP-COP1-P-C	R1.190.1140.0	SP-COP2-EN-C	R1.190.1220.0
SP-COP2-EN-P-A	R1.190.1230.0	SP-COP2-EN-A	R1.190.1210.0
SP-COP2-EN-P-C	R1.190.1240.0	SP-COP2-EN-C	R1.190.1220.0
SP-COP2-ENI-P-A	R1.190.1330.0	SP-COP2-ENI-A	R1.190.1310.0
SP-COP2-ENI-P-C	R1.190.1340.0	SP-COP2-ENI-C	R1.190.1320.0
SP-COP1-A	R1.190.1110.0	SP-COP2-EN-A	R1.190.1210.0
SP-COP1-M-A	R1.190.1150.0	SP-COP2-EN-M-A	R1.190.1250.0
SP-COP1-M-C	R1.190.1160.0	SP-COP2-EN-M-C	R1.190.1260.0

3.4 Controller module

The SP-COP1 controller module is a central processing unit for the entire system, in which all of the signals are monitored and logically processed according to the configuration stored in the SP-COP-CARD1 (SD card) program removable storage. Please note that the application on a controller module can only start if SP-COP-CARD1 is plugged in and contains a valid controller project.

Controller modules are distinguished by three categories:

- Communication: SP-COP1, SP-COP2-EN, SP-COP2-ENI
- Functionality: COMPACT, COMPACT PLUS, MOTION
- Terminal type: Screw terminals spring-loaded terminals

In the following chapters, the controller modules are grouped by communication and functionality, which influence the resulting hardware.

3.4.1 Controller module SP-COP1

3.4.1.1 Description

The controller modules starting with SP-COP1 offer a mini-USB interface for programming, but no Ethernet.

The SP-COP1 controller modules are the entry-level model for the COMPACT variant, whereas SP-COP1-P is the entry-level model for the COMPACT PLUS variant. Both types have the same hardware and offer different functions via firmware.

The SP-COP1 controller modules are the entry-level model for the COMPACT variant.

SP-COP1-M is explained in a separate chapter, because the hardware is different.

3.4.1.2 Display elements, interfaces and terminal description

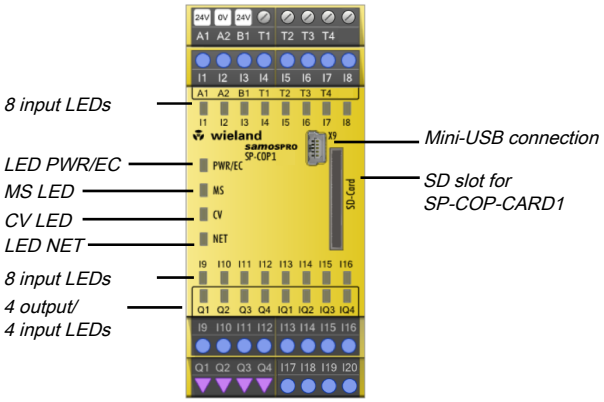

Fig. 5: SP-COP1 display elements

Tab. 4: 4 LED displays SP-COP1

LED	Meaning
PWR/EC	Green: Display of the supply voltage status Red: Display of an error through various *Flashing codes [ch. 10.3.1, p. 130]*
MS	Display of the *Module status [ch. 10.3.1, p. 130]*
CV	Display of the verification status of the *Control project [ch. 10.3.1, p. 130]*
I1 - I20	Status display of the *Inputs [ch. 10.3.1, p. 130]*
Q1 - Q4	Status display of the *Outputs [ch. 10.3.1, p. 130]*

Tab. 5: Terminal assignment SP-COP1

Terminal	Assignment
A1	24 V supply voltage for all modules, except for supply of outputs
A2	GND of supply voltage
I1 - I20	Safe digital inputs
Q1 - Q4	Safe digital outputs
B1	24 V supply voltage of outputs Q1 - Q4
T1 - T4	Test outputs

USB interface

The controller module has a mini-USB interface with the following functions:

- Transfer of the configuration from samos® PLAN 6 to the program removable storage
- Reading of configuration from program removable storage in samos® PLAN 6
- Diagnostics of the samos® PRO system with samos® PLAN 6

Tab. 6: USB interface pin assignment

Connector/bushing USB mini	Pin	Signal
	1	+5V
	2	- data
	3	+ data
	5	GND

NOTICE

- If the USB interface of the controller module is permanently connected, then the maximum permissible cable length is 3 m.
- Avoid using ground loops between the USB interface GND and the A2 connection of the controller module, e.g. by using USB insulators (galvanic separation). Please make sure that the PC/laptop for programming and the machine are either connected to the same power supply (same ground) or the PC/laptop is operating in battery mode.

3.4.1.3 Internal circuits

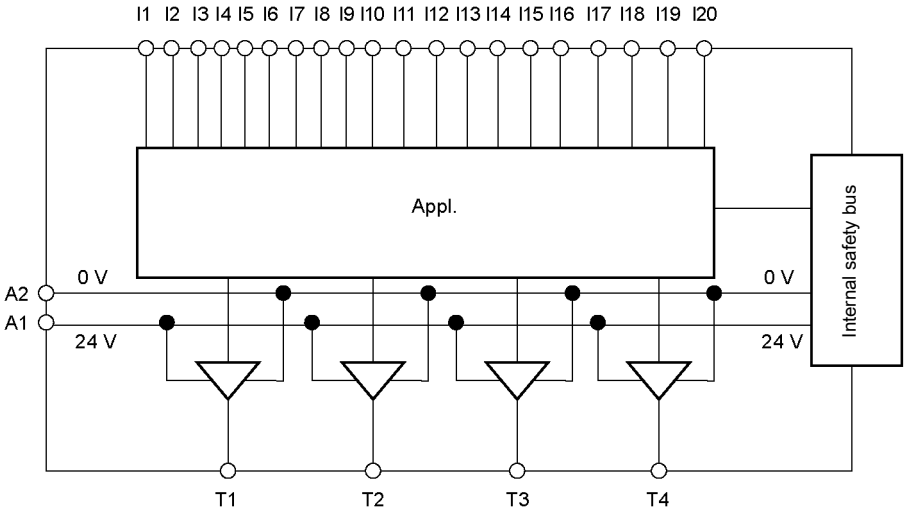

Fig. 6: Inputs and test outputs at an SP-COP1 module

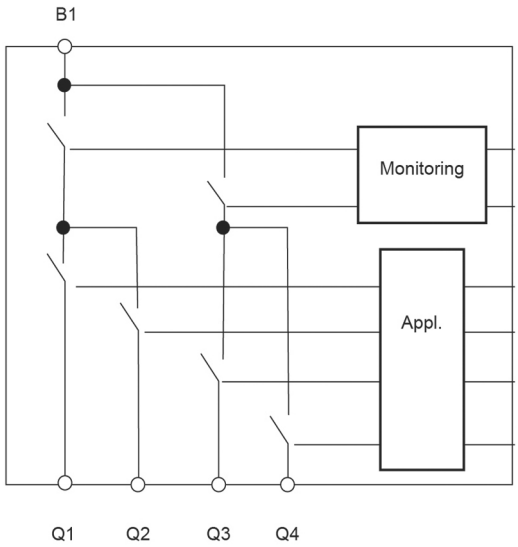

Fig. 7: Outputs at an SP-COP1 module

3.4.1.4 Limited short-circuit detection in the input circuits

WARNING

- Short-circuits between the test signal outputs T1–T4 of a module SP-COP1 are detected as an error.
- Short-circuits between the test signal outputs of multiple SP-DIO, SP-SDI modules and SP-COP1 can only be detected when the test gaps of the test signal generators are < 4 ms and the test periods are ≥ 200 ms. Short-circuits to 24 V DC (after High) at inputs that are connected to test outputs are detected independently of the length of the test gaps.
  Take note of this during wiring, e.g. by using separate routing or protected lines!
- If the test signal outputs T1-T4 of an SP-COP1 module or X1-X8 of an SP-SDI module or X1-X4 of an SP-DIO module are not wired as configured in the project, it is possible that this will not be detected as an error during normal operation. In this case, there may be cyclical switch-on and switch-off processes at the inputs.
  Keep this in mind during wiring and commissioning. During commissioning, use samos® PLAN 6 **in the Diagnostics view to check whether the system generates error entries.**

3.4.1.5 Deactivating the test pulses at the outputs

It is possible to deactivate the test pulses at one or more output pairs.

The outputs of a SP-COP1 module are combined into two output pairs. Q1/Q2 and Q3/Q4. The test pulses each act upon the two outputs of an output pair.

WARNING

Switching off the test pulses at one of the two outputs of an output switches off the test pulses of the entire output pair!

Deactivating the test pulses at one or more safety outputs of a SP-COP1 module reduces the safety parameters of both safety outputs of the respective output pair of this module.

- Take this into account in the risk analysis and risk avoidance strategy of your application.
- You can find more detailed information on the safety parameters here: *Safety technology reference values [ch. 12.4, p. 145]*

WARNING

Be sure to use protected or separate cabling!

- If you deactivate the test pulses at one or more safety outputs, short-circuits at other output circuits cannot be detected. This affects the safety function!
- In the event of a short-circuit after 24 V, it will no longer be possible to switch off the output. In addition, it will not be possible to prevent reverse current from going into a switched-off output, which will influence the capability of switching off the outputs.

WARNING

Carry out cyclic tests when the test pulses at one or more safety outputs are deactivated!

If you deactivated the test pulses on one or more safety outputs, carry out the following tests once a year:

- Switch off all the safety outputs without test pulses simultaneously for at least one second using the logic program of the controller module.
  OR
- Restart the samos® PRO system by switching off the power supply and switching it on again.

You will thus deactivate the test pulses at an output of an SP-COP1 module:

➡ Select an actuator in samos® PLAN 6 and place it on a logic page.

➡ Using the right mouse button, click the actuator and select the **Properties** command in the context menu.

➡ Place a checkmark by **No test pulses**.
In the module overview, information about the switched off test pulses is displayed under the appropriate output (e.g. Q1: “Test pulses are deactivated!”).

3.4.1.6 Single-channel use of outputs

WARNING

Be sure to consider a potential brief switch to high with single-channel safety outputs!

In a single-channel configured output, an unwanted release can be switched for a maximum of 12 ms in the event of an error (internal error).

- Consider this during your risk analysis and reduction strategy.
  Otherwise, there is a hazard for the operator of the machine.

3.4.2 Controller module SP-COP2-EN

3.4.2.1 Description

The controller modules starting with SP-COP2-EN offer both a mini-USB interface and an Ethernet interface for programming, but no industrial protocols on board.

The SP-COP2-EN controller modules are the entry-level model for the COMPACT variant, whereas SP-COP2-EN-P is the entry-level model for the COMPACT PLUS variant. Both types have the same hardware and offer different functions via firmware.

The SP-COP2-EN controller modules are the entry-level model for the COMPACT variant.

3.4.2.2 Display elements, interfaces and terminal description

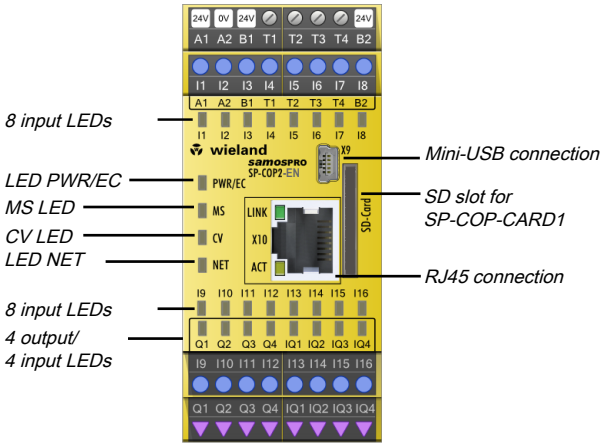

Fig. 8: Display elements of a SP-COP2-EN module

Tab. 7: SP-COP2-EN LED displays

LED	Meaning
PWR/EC	Display of the supply voltage status Display of an error through various *Flashing codes [ch. 10.3.1, p. 130]*
MS	Display of the *Module status [ch. 10.3.1, p. 130]*
CV	Display of the verification status of the *Control project [ch. 10.3.1, p. 130]*
Input LED I1 to I16, IQ1 to IQ4	Status display of the *Inputs [ch. 10.3.1, p. 130]*
Output LED Q1 to Q4, IQ1 to IQ4	Status display of the *Outputs [ch. 10.3.1, p. 130]*

Tab. 8: SP-COP2-EN pin assignment

Pin	assignment
A1	24 V supply voltage for all modules, except for supply of outputs
A2	GND of supply voltage
I1 - I16	Safe, digital inputs
Q1 - Q4	Safe, digital outputs
IQ1 - IQ4	Safe, digital inputs or outputs (configurable through samos® PLAN 6)
B1	24 V supply voltage of outputs Q1 - Q4
B2	24 V supply voltage of configurable outputs IQ1 - IQ4

Pin	assignment
T1 - T4	Test outputs

USB interface

The controller module has a mini-USB interface with the following functions:

- Transfer of the configuration from samos® PLAN 6 to the program removable storage
- Reading of configuration from program removable storage in samos® PLAN 6
- Diagnostics of the samos® PRO system with samos® PLAN 6

Tab. 9: USB interface pin assignment

Connector/bushing USB mini	Pin	Signal
	1	+5V
	2	- data
	3	+ data
	5	GND

NOTICE

- If the USB interface of the controller module is permanently connected, then the maximum permissible cable length is 3 m.
- Avoid using ground loops between the USB interface GND and the A2 connection of the controller module, e.g. by using USB insulators (galvanic separation). Please make sure that the PC/laptop for programming and the machine are either connected to the same power supply (same ground) or the PC/laptop is operating in battery mode.

Ethernet interface

The controller module has an Ethernet interface with the following functions:

- Transfer of the configuration from samos® PLAN 6 to the program removable storage
- Reading of configuration from program removable storage in samos® PLAN 6
- Diagnostics of the samos® PRO system with samos® PLAN 6
- Continuous diagnosis of the samos® PRO system via a connected PLC

Tab. 10: RJ 45 bushing pin assignment

Connector/bushing RJ45	Pin	Signal (Auto MDI-X)
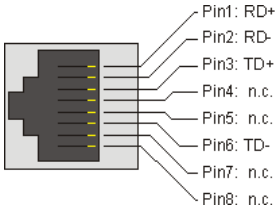	1	RD+ / TD+
	2	RD- / TD-
	3	TD+ / RD+
	6	TD- / RD-

The device automatically detects which cable type (patch cable or cross-link cable) is being used (Auto MDI-X), which is why the pin assignment does not matter with regard to the RD or TD signals.

3.4.2.3 Internal circuits

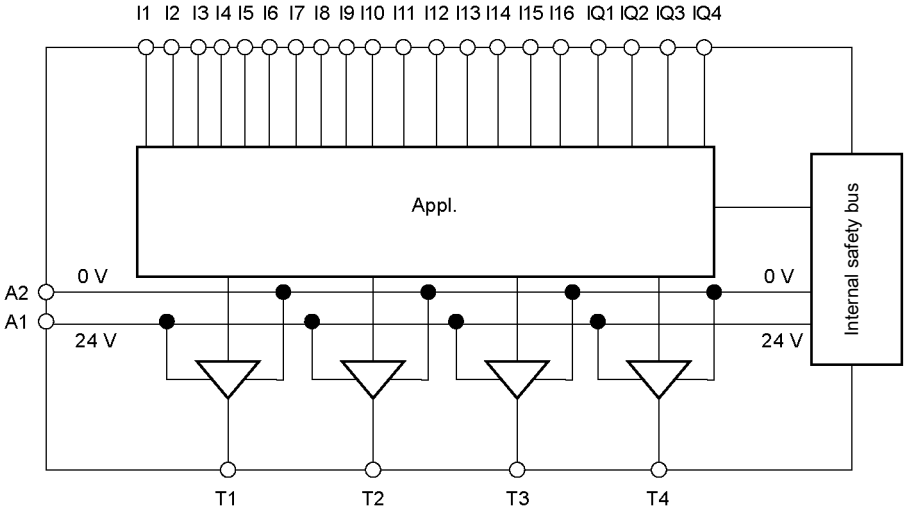

Fig. 9: Inputs and test pulses at an SP-COP2-EN module

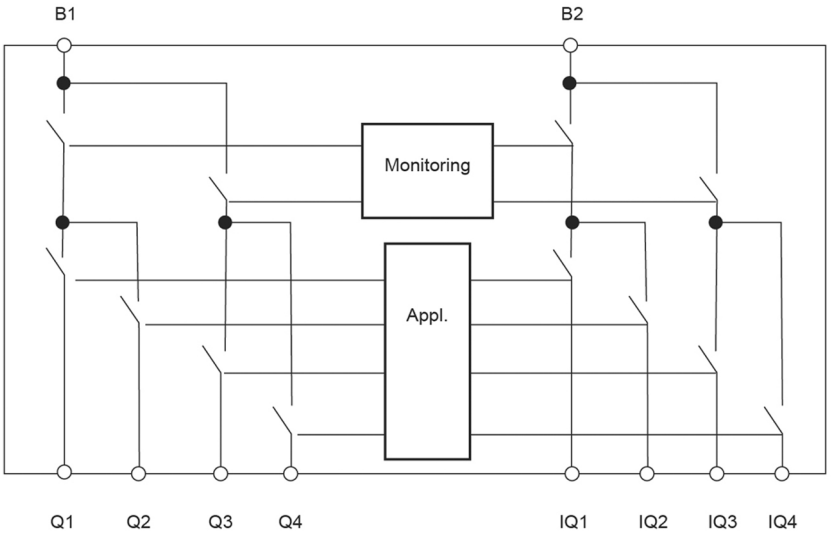

Fig. 10: Outputs at an SP-COP2-EN module

3.4.2.4 Limited short-circuit detection in the input circuits

WARNING

- Short-circuits between the test signal outputs T1–T4 of a module SP-COP2-EN are detected as an error.
- Short-circuits between the test signal outputs of multiple SP-DIO, SP-SDI modules and SP-COP2-EN can only be detected when the test gaps of the test signal generators are < 4 ms and the test periods are ≥ 200 ms. Short-circuits to 24 V DC (after High) at inputs that are connected to test outputs are detected independently of the length of the test gaps.
  Take note of this during wiring, e.g. by using separate routing or protected lines!
- If the test signal outputs T1-T4 of an SP-COP2-EN module or X1-X8 of an SP-SDI module or X1-X4 of an SP-DIO module are not wired as configured in the project, it is possible that this will not be detected as an error during normal operation. In this case, there may be cyclical switch-on and switch-off processes at the inputs.
  Keep this in mind during wiring and commissioning. During commissioning, use samos® PLAN 6 **in the Diagnostics view to check whether the system generates error entries.**

3.4.2.5 Deactivating the test pulses at the outputs

It is possible to deactivate the test pulses at one or more output pairs.

The outputs are combined into four output pairs with the SP-COP2-EN: Q1/Q2, Q3/Q4, IQ1/IQ2, and IQ3/IQ4. The test pulses each act upon the two outputs of an output pair.

WARNING

Switching off the test pulses at one of the two outputs of an output switches off the test pulses of the entire output pair!

Deactivating the test pulses at one or more safety outputs of a SP-COP2-EN module reduces the safety parameters of both safety outputs of the respective output pair of this module.

- Take this into account in the risk analysis and risk avoidance strategy of your application.
- You can find more detailed information on the safety parameters here: *Safety technology reference values [ch. 12.4, p. 145]*

WARNING

Be sure to use protected or separate cabling!

- If you deactivate the test pulses at one or more safety outputs, short-circuits at other output circuits cannot be detected. This affects the safety function!
- In the event of a short-circuit after 24 V, it will no longer be possible to switch off the output.

WARNING

Carry out cyclic tests when the test pulses at one or more safety outputs are deactivated!

If you deactivated the test pulses on one or more safety outputs, carry out the following tests once a year:

- Switch off all the safety outputs without test pulses simultaneously for at least one second using the logic program of the controller module.
  OR
- Restart the samos® PRO system by switching off the power supply and switching it on again.

You deactivate the test pulses at an output of an SP-COP2-EN module as follows:

➡ Connect an output element to the SP-COP2-EN module.

➡ Using the right mouse button, click on the output element and select the **Properties** command in the context menu.

➡ Place a checkmark by **No test pulses**.
In the module overview, information about the switched off test pulses is displayed under the appropriate output (e.g. Q1: “Test pulses are deactivated!”).

3.4.2.6 Single-channel use of outputs

WARNING

Be sure to consider a potential brief switch to high with single-channel safety outputs!

In the event of an internal hardware error, single-channel safety outputs can switch to high once for 10 ms after the error has been detected.

- Consider this during your risk analysis and reduction strategy.
  Otherwise, there is a hazard for the operator of the machine.

3.4.3 Controller module SP-COP2-ENI

3.4.3.1 Description

Controller module SP-COP2-ENI has the same functionality, the same connections and the same displays as the SP-COP2-EN controller module.

Additionally, this controller module has the following industry protocols on board:

- Modbus/TCP interface
- PROFINET IO interface
- EtherNet/IP interface

The SP-COP2-ENI controller module is the high-end model for the COMPACT variant, whereas SP-COP2-ENI-P is the high-end model for the COMPACT PLUS variant. Both types have the same hardware and offer different functions via firmware.

SP-COP2-ENI-M is explained in a separate chapter, because the hardware is different.

The SP-COP2-ENI controller module is the high-end model for the COMPACT variant.

3.4.3.2 Display elements, interfaces and terminal description

The display elements, interfaces and terminal assignment are identical to those of the SP-COP2-EN controller module.

Further information: *Display elements, interfaces, and terminal description [ch. 3.4.2.2, p. 24]*

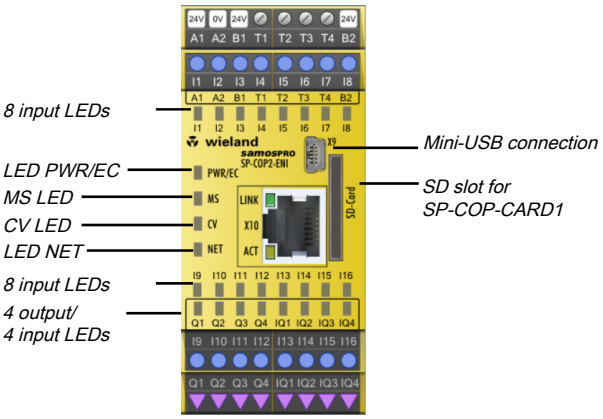

Fig. 11: Display elements of a SP-COP2-ENI module

3.4.3.3 Internal circuits

The internal circuits are identical to those of the SP-COP2-EN controller module.

Further information: *Internal circuits [ch. 3.4.2.3, p. 25]*

3.4.3.4 Limited short-circuit detection in the input circuits

WARNING

- Short-circuits between the test signal outputs T1–T4 of a module SP-COP2-ENI are detected as an error.
- Short-circuits between the test signal outputs of multiple SP-DIO, SP-SDI modules and SP-COP2-ENI can only be detected when the test gaps of the test signal generators are < 4 ms and the test periods are ≥ 200 ms. Short-circuits to 24 V DC (after High) at inputs that are connected to test outputs are detected independently of the length of the test gaps.
  Take note of this during wiring, e.g. by using separate routing or protected lines!
- If the test signal outputs T1-T4 of an SP-COP2-ENI module or X1-X8 of an SP-SDI module or X1-X4 of an SP-DIO module are not wired as configured in the project, it is possible that this will not be detected as an error during normal operation. In this case, there may be cyclical switch-on and switch-off processes at the inputs.
  Keep this in mind during wiring and commissioning. During commissioning, use samos® PLAN 6 **in the Diagnostics view to check whether the system generates error entries.**

3.4.3.5 Deactivating the test pulses at the outputs

It is possible to deactivate the test pulses at one or more output pairs.

The outputs are combined into four output pairs with the SP-COP2-ENI: Q1/Q2, Q3/Q4, IQ1/IQ2, and IQ3/IQ4. The test pulses each act upon the two outputs of an output pair.

WARNING

Switching off the test pulses at one of the two outputs of an output switches off the test pulses of the entire output pair!

Deactivating the test pulses at one or more safety outputs of a SP-COP2-ENI module reduces the safety parameters of both safety outputs of the respective output pair of this module.

- Take this into account in the risk analysis and risk avoidance strategy of your application.
- You can find more detailed information on the safety parameters here: *Safety technology reference values [ch. 12.4, p. 145]*

WARNING

Be sure to use protected or separate cabling!

- If you deactivate the test pulses at one or more safety outputs, short-circuits at other output circuits cannot be detected. This affects the safety function!
- In the event of a short-circuit after 24 V, it will no longer be possible to switch off the output.

WARNING

Carry out cyclic tests when the test pulses at one or more safety outputs are deactivated!

If you deactivated the test pulses on one or more safety outputs, carry out the following tests once a year:

- Switch off all the safety outputs without test pulses simultaneously for at least one second using the logic program of the controller module.
  OR
- Restart the samos® PRO system by switching off the power supply and switching it on again.

You deactivate the test pulses at an output of an SP-COP2-ENI module as follows:

➡ Connect an output element to the SP-COP2-ENI module.

➡ Using the right mouse button, click on the output element and select the **Properties** command in the context menu.

➡ Place a checkmark by **No test pulses**.
In the module overview, information about the switched off test pulses is displayed under the appropriate output (e.g. Q1: “Test pulses are deactivated!”).

3.4.3.6 Single-channel use of outputs

Be sure to consider a potential brief switch to high with single-channel safety outputs!

In the event of an internal hardware error, single-channel safety outputs can switch to high once for 10 ms after the error has been detected.

- Consider this during your risk analysis and reduction strategy.
  Otherwise, there is a hazard for the operator of the machine.

3.4.4 Controller modules SP-COP2-EN-M and SP-COP2-ENI-M

3.4.4.1 Description

The SP-COP2-EN-M and SP-COP2-ENI-M controller modules offer a mini-USB interface for programming but no Ethernet and are the entry-level model for the MOTION variant.

The SP-COP2-EN-M and SP-COP2-ENI-M controller modules offer both a mini-USB interface and an Ethernet interface for programming.

Additionally, these SP-COP2-EN-M and SP-COP2-ENI-M controller module have the following industry protocols on board:

- Modbus/TCP interface
- PROFINET IO interface
- EtherNet/IP interface

The SP-COP2-EN-M and SP-COP2-ENI-M controller modules have the same communication capabilities as the respective SP-COP1 and SP-COP2-ENI controller modules as well as the same connections and displays.

In contrast to the other controller modules, the SP-COP2-EN-M and SP-COP2-ENI-M controller modules have four fast inputs (I13 – I16) which may only be used for motion monitoring.

NOTICE

Only motion monitoring sensors can be connected to inputs I13-I16. samos® PLAN 6 prevents the configuration of standard sensors on these inputs.

Further information on connecting sensors: *Connection and wiring [ch. 4.5.1.3, p. 73]*

3.4.4.2 Display elements, interfaces and terminal description

The display elements, interfaces and terminal assignment are identical to those of the SP-COP1 and SP-COP2-EN controller module.

Further information: *Display elements, interfaces and terminal description [ch. 3.4.1.2, p. 20]* or *Display elements, interfaces and terminal description [ch. 3.4.2.2, p. 24]*

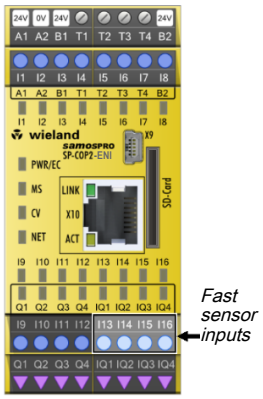

Fig. 12: SP-COP2-ENI-M controller module

3.4.4.3 Internal circuits

The internal circuits are identical to those of the SP-COP1 and SP-COP2-EN controller module.

Further information: *Internal circuits [ch. 3.4.1.3, p. 21]* or *Internal circuits [ch. 3.4.2.3, p. 25]*

3.4.4.4 Limited short-circuit detection in the input circuits

WARNING

- Short-circuits between the test signal outputs T1–T4 of an SP-COP1-M or SP-COP2-ENI-M module are detected as an error.
- Short-circuits between the test signal outputs of multiple SP-DIO-, SP-SDI modules and SP-COP1-M or SP-COP2-ENI-M can only be detected when the test gaps of the test signal generators are < 4 ms and the test periods are ≥ 200 ms. Short-circuits to 24 V DC (High) at inputs that are connected to test outputs are detected independently of the length of the test gaps.
  Take note of this during wiring, e.g. by using separate routing or protected lines!
- If the test signal outputs T1-T4 of an SP-COP1-M or SP-COP2-ENI-M module or X1-X8 of an SP-SDI module or X1-X4 of an SP-DIO module are not wired as configured in the project, it is possible that this will not be detected as an error during normal operation. In this case, there may be cyclical switch-on and switch-off processes at the inputs.
  Keep this in mind during wiring and commissioning. During commissioning, use samos® PLAN 6 **in the Diagnostics view to check whether the system generates error entries.**

3.4.4.5 Deactivating the test pulses at the outputs

It is possible to deactivate the test pulses at one or more output pairs.

The outputs of an SP-COP1-M and SP-COP2-ENI-M module are combined into two or four output pairs: Q1/Q2, Q3/Q4 or Q1/Q2, Q3/Q4, IQ1/IQ2 and IQ3/IQ4. The test pulses each act upon the two outputs of an output pair.

WARNING

Switching off the test pulses at one of the two outputs of an output switches off the test pulses of the entire output pair!

Deactivating the test pulses at one or more safety outputs of an SP-COP1-M or SP-COP2-ENI-M module reduces the safety parameters of both safety outputs of the respective output pair of this module.

- Take this into account in the risk analysis and risk avoidance strategy of your application.
- You can find more detailed information on the safety parameters here: *Safety technology reference values [ch. 12.4, p. 145]*

WARNING

Be sure to use protected or separate cabling!

- If you deactivate the test pulses at one or more safety outputs, short-circuits at other output circuits cannot be detected. This affects the safety function!
- In the event of a short-circuit after 24 V, it will no longer be possible to switch off the output.

WARNING

Carry out cyclic tests when the test pulses at one or more safety outputs are deactivated!

If you deactivated the test pulses on one or more safety outputs, carry out the following tests once a year:

- Switch off all the safety outputs without test pulses simultaneously for at least one second using the logic program of the controller module.
  OR
- Restart the samos® PRO system by switching off the power supply and switching it on again.

You deactivate the test pulses at an output of an SP-COP1-M or SP-COP2-ENI-M module as follows:

➡ Connect an output element to the SP-COP1-M or SP-COP2-ENI-M module.

➡ Using the right mouse button, click on the output element and select the **Properties** command in the context menu.

➡ Place a checkmark by **No test pulses**.
In the module overview, information about the switched off test pulses is displayed under the appropriate output (e.g. Q1: “Test pulses are deactivated!”).

3.4.4.6 Single-channel use of outputs

Be sure to consider a potential brief switch to high with single-channel safety outputs!

In the event of an internal hardware error, single-channel safety outputs can switch to high once for 10 ms after the error has been detected.

- Consider this during your risk analysis and reduction strategy.
  Otherwise, there is a hazard for the operator of the machine.

3.5 SP-COP-CARD1 removable storage

3.5.1 Description

The system configuration of the entire samos® PRO system is stored in the SP-COP-CARD1 program removable storage. This has the advantage that the samos® PRO system does not have to be reconfigured when modules are replaced.

The SP-COP-CARD1 removable storage is an SD card that is produced and formatted specially for use in the controller modules.

Important notes

NOTICE

- The data stored in the SP-COP-CARD1 program removable storage will be retained even if the supply voltage is interrupted.
- When replacing a module, make sure that the program removable storage is inserted into the appropriate controller module. Mark all of the connection lines and plug connectors on the samos® PRO clearly to prevent mix-ups.
- Commonly available SD cards cannot be used/inserted in samos® PRO and controller modules.
- The user must not delete or modify the data on the second partition of the SD card.
- The replacement of a verified user project can be recognized by the entry of the diagnostic number 24230000.

WARNING

- After the user project is transferred to the SD card and the user project has been replaced by substituting the SD card, the correct function of the safety application must be checked.
- Make sure that the SD card cannot be replaced by authorized personnel. You are welcome to inquire about the possibilities for "Enhanced security".
  For more information, refer to the software manual, chapter "Protect project from manipulation (extended security function)".

3.5.2 Files on the removable storage

The following table explains the significance of the files on the removable storage SP-COP-CARD1.

Tab. 11: Files on SP-COP-CARD1

File name	Function	Reading...	Writing...
config.yaml	Basic configuration of the communication (device name, TCP/IP configuration etc.)	… at device start. and … in samos® PLAN 6 in the configuration dialog of the controller (**Properties** docking window) if you click **Control configuration | Send**.	… with the basic data before the initial delivery. and … in samos® PLAN 6 in the configuration dialog of the controller (**Properties** docking window) if you click **Control configuration | Send**. and … when sending new data from a PLC via PROFINET IO or EtherNet/IP.

File name	Function	Reading...	Writing...
HISTORY.CSV	Non-volatile storage of diagnostics and error entries	… from samos® PLAN 6 for the **Diagnostics** view.	… for a new diagnostic or error event. and … in the **Diagnostics** view of samos® PLAN 6 click on the **Delete** button[2].
PROJECT.XML	Project file, user program	… at device start. and … when establishing a connection with samos® PLAN 6. and … before verifying a project.	… when sending a project e.g. from samos® PLAN 6 (independent of the selection in connection dialog) [3]. and … while verifying a project.

[1] Details in software manual, "Diagnostic view” section

[2] Details in software manual, "Reference of commands and features” table

[3] Details in software manual, "Connect with the safety controller” chapter

The contents of the **config.yaml** file is changed by samos® PLAN 6, from a PLC via PROFINET IO or EtherNet/IP or directly by the user by the use of an SD card reader. In which the data format **yaml** (Yet Another Markup Language) is to be retained.

The following table describes the function of selected elements.

Tab. 12: Significance of the content of the config.yaml file

Section	Function	Value range
ident:name:	Device name, station name	Character string without the '#', ':' characters
ethernet:dhcp:	DHCP client activation	yes no
ethernet:ip:	IPv4 address of the device	0.0.0.1 to 223.255.255.254 and not 127.0.0.1
ethernet:mask:	IPv4 network mask	255.0.0.0 to 255.255.255.253
ethernet:gw:	IPv4 gateway	0.0.0.0 or 0.0.0.1 to 223.255.255.254 and not 127.0.0.1
ethernet:multicast:	IPv4 Multicast membership for the device search by samos® PLAN 6	224.0.0.0 0.0.0.0
ethernet:tool:	Communication with samos® PLAN 6 is optionally deactivatable	yes no
usb:vcom:	USB interface activation	yes no

If the DHCP Client is activated, the device searches for a DHCP server for approx. 1 minute. If a DHCP server does not respond correctly, the IPv4 data in the config.yaml file for the device is activated.

The user must not delete or modify undocumented data elements in the config.yaml file.

3.6 SP-SDIO input/output expansion module

3.6.1 Description

The SP-SDIO module is an input/output expansion with eight safe inputs and four safe outputs, as well as two test outputs X1 and X2.

The SP-SDIO module offers the following functions:

- Monitoring of connected devices and sensors
  For further information: *Connection of sensors and actuators [ch. 4, p. 52]*
- Forwarding of input information to the controller module
- Receipt of control signals from the controller module and corresponding actuation of outputs
- Fast shut-off: Direct switch-off of the actuators connected on the module. This considerably reduces the response time of the outputs if they are controlled by inputs of the same module. Only 8 ms are added to the response times of the actuators to switch off the outputs. The execution times on the internal safety bus and the logic do not play any role in this case.
  Further information: *Response times for basic safety functions [ch. 12.1, p. 139]*
- Activating or deactivating test pulses at the outputs (Q1–Q4) from module version B-xx (firmware version V2.00.0).

The SP-SDIO module cannot be operated alone; it always requires an SP-COP controller module (see "samos® PLAN 6" programming software).

It is possible to use multiple SP-SDIO84 modules simultaneously (see *System setup [ch. 3.2, p. 16]*). The voltage of the internal logic and the test outputs is supplied via the system connector and the internal safety bus. The voltage of the Q1–Q4 outputs of the SP-SDIO must be supplied directly via A1/A2 at the respective module.

WARNING

Limited short-circuit detection in the input circuits

- One SP-SDIO module has two test signal generators, X1 and X2.
- Short-circuits between test signal generators of a SP-SDI or SP-SDIO module are detected. Between different modules the short circuit detection is then only ensured if the test gaps of the test signal generators are < 4 ms and the test periods ≥ 200 ms. Short-circuits to 24 V DC (High) at inputs that are connected to test outputs are detected independently of the length of the test gaps.
  Take note of this during wiring (e.g. by using separate routing or protected lines)!

NOTICE

- The LEDs of inputs I1 to I8 indicate the state of the inputs at an update interval of about 64 ms.

3.6.2 Display elements and terminal assignment

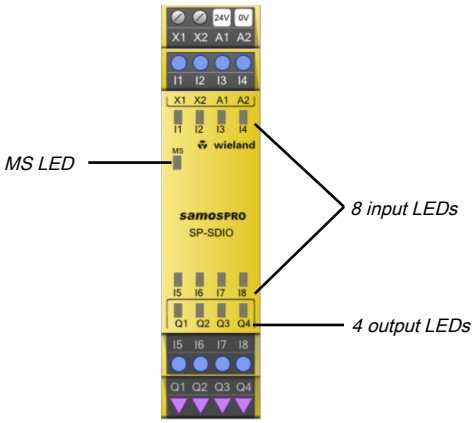

Fig. 13: Display elements of the SP-SDIO module

Flashing codes

Further information: *Device state and LED displays in the safe input/output modules [ch. 10.3.2, p. 132]*

Terminal assignment

Tab. 13: SP-SDIO terminal assignment reference

Terminal	Assignment
X1/X2	Test output 1 / test output 2
I1–I4	Inputs 1 to 4
A1	24V
A2	GND
I5–I8	Inputs 5 to 8
Q1–Q4	Outputs 1 to 4

3.6.3 Internal circuits

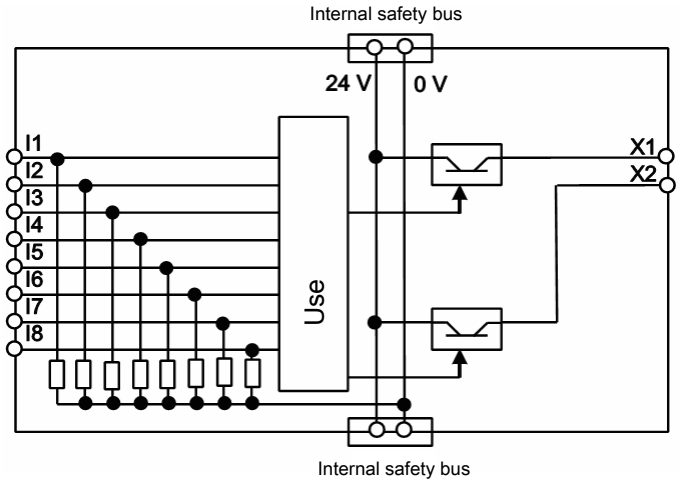

Fig. 14: Internal circuits of the SP-SDIO module: Safe inputs and test outputs

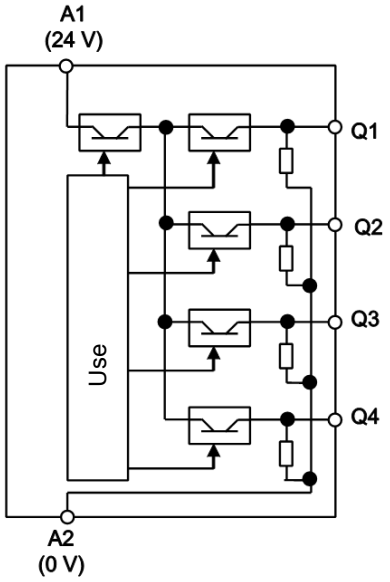

Fig. 15: Internal circuits of the SP-SDIO module: Safety outputs

3.6.4 Deactivating the test pulses at the outputs

With build state B-xx (firmware version V2.00.0) and higher, it is possible to deactivate the test pulses at one or more outputs of SP-SDIO84-P1 modules.

WARNING

Deactivating the test pulses at any output reduces the safety parameters of all outputs!

Deactivation of the test pulses on one or more safety outputs of a module SP-SDIO reduces the safety parameters or all safety outputs Q1…Q4 of this module.

- Take this into account to ensure that your application corresponds to a reasonable risk analysis and avoidance strategy.
- You can find more detailed information on the safety parameters here: *Technical data [ch. 12, p. 139]*

WARNING

Be sure to use protected or separate cabling!

- If you deactivate the test pulses at one or more safety outputs, short-circuits at other output circuits cannot be detected. This affects the safety function!
- In the event of a short-circuit after 24 V, it will no longer be possible to switch off the output. Furthermore, it will not be possible to prevent reverse current from going into a switched-off output, which will influence the capability of switching off the outputs.

WARNING

Carry out cyclic tests when the test pulses at one or more safety outputs are deactivated!

If you deactivated the test pulses on one or more safety outputs, carry out the following tests once a year:

- Switch off all the safety outputs without test pulses simultaneously for at least one second using the logic program of the controller module.
  OR
- Restart the samos® PRO system by switching off the power supply and switching it on again.

You will thus deactivate the test pulses at an output of an SP-SDIO module:

➡ Connect an output element to the SP-SDIO module.

➡ Using the right mouse button, click on the output element and select the **Properties** command in the context menu.

➡ Place a checkmark by **No test pulses**.
In the module overview, information about the switched off test pulses is displayed under the appropriate output (e.g. Q1: “Test pulses are deactivated!”).

3.6.5 Single-channel use of outputs

WARNING

Be sure to consider a potential brief switch to high with single-channel safety outputs!

In the event of an internal hardware error, single-channel safety outputs (Q1 to Q4) can switch to high once for 10 ms after the error has been detected. Consider this during your risk analysis and reduction strategy. Otherwise, there is a hazard for the operator of the machine.

3.7 SP-SDI input/output expansion module

3.7.1 Description

The SP-SDI module is an input expansion with eight safe inputs. If fulfills the following tasks:

- Monitoring of connected sensors
  For further information: *Connection of sensors and actuators [ch. 4, p. 52]*
- Forwarding of input information to the controller module

The SP-SDI module cannot be operated alone and always requires an SP-COP controller module (see "samos® PLAN 6" programming software).

It is possible to use multiple SP-SDI modules simultaneously (see *System setup [ch. 3.2, p. 16]*). The voltage of the internal logic and the test outputs is supplied via the program removable storage device and the internal safety bus.

WARNING

Limited short-circuit detection in the input circuits

- One SP-SDI module has two test signal generators. One test signal generator is responsible for the odd-numbered test outputs (X1, X3, X5, and X7), while the other is responsible for the even-numbered test outputs (X2, X4, X6, and X8).
- Short-circuits between test signal generators of a SP-SDI or SP-SDIO module are detected. Between different modules the short circuit detection is then only ensured if the test gaps of the test signal generators are < 4 ms and the test periods ≥ 200 ms. Short-circuits to 24 V DC (High) at inputs that are connected to test outputs are detected independently of the length of the test gaps.
- Please ensure that the odd-numbered test outputs (X1, X3, X5, and X7) at the SP-SDI are connected to a common test signal generator and that the even-numbered test outputs (X2, X4, X6, and X8) are connected to another common test signal generator. Therefore, short-circuits between the odd-numbered test outputs (X1, X3, X5, and X7) cannot be detected. The same applies accordingly to the even-numbered test outputs X2, X4, X6, and X8.
  Make note of this during wiring (e.g. through separate routing or protected lines)!

3.7.2 Display elements and terminal assignment

NOTICE

- The LEDs of inputs I1 to I8 indicate the state of the inputs at an update rate of about 64 ms.

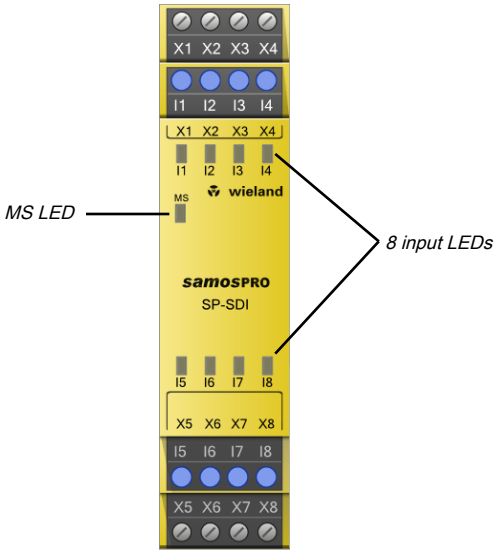

Fig. 16: Display elements on the SP-SDI module

Flashing codes

Further information: *Device state and LED displays in the safe input/output modules [ch. 10.3.2, p. 132]*

Terminal assignment

Tab. 14: Terminal assignment reference of the SP-SDI module

Terminal	Assignment
X1/X3	Test signal 1
X2/X4	Test signal 2
I1 – I4	Inputs 1 to 4
I5 – I8	Inputs 5 to 8
X5/X7	Test signal 1
X6/X8	Test signal 2

3.7.3 Internal circuits

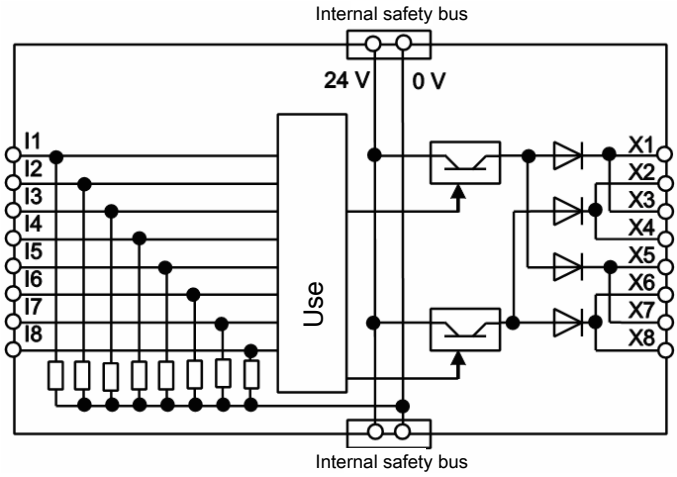

Fig. 17: Internal circuits of the SP-SDI module: Safety inputs and test outputs

3.8 SP-DIO input/output expansion module

3.8.1 Description

The SP-DIO module is an input/output expansion with 4 non-secure inputs, 4 non-secure outputs and 4 non-secure input/output combinations whose function is configured using the samos® PLAN 6 software.

Further information: *Connection of sensors and actuators [ch. 4, p. 52]*

The SP-DIO module offers the following functions:

- Forwarding of input information to the controller module
- Receipt of control signals from the controller module and corresponding switching of outputs

The SP-DIO module cannot be operated alone; it always requires an SP-COP controller module (see "samos® PLAN 6" programming software).

It is possible to use multiple SP-DIO modules simultaneously (see *System setup [ch. 3.2, p. 16]*). The voltage of the internal logic is supplied via the system connector and the internal safety bus. The voltage of the Y1–Y4 and IY5–IY8 outputs of the SP-DIO must be supplied directly via A1/A2 at the respective module.

Refresh rate

The LEDs of the I1–I4 inputs and the Y1–Y4 outputs or the inputs/outputs IY5-IY8 combination show the state with a refresh rate of approx. 4 ms.

Restricted selection of inputs

Only the single-channel inputs are available to be selected in the configuration for the SP-DIO expansion module, for example:

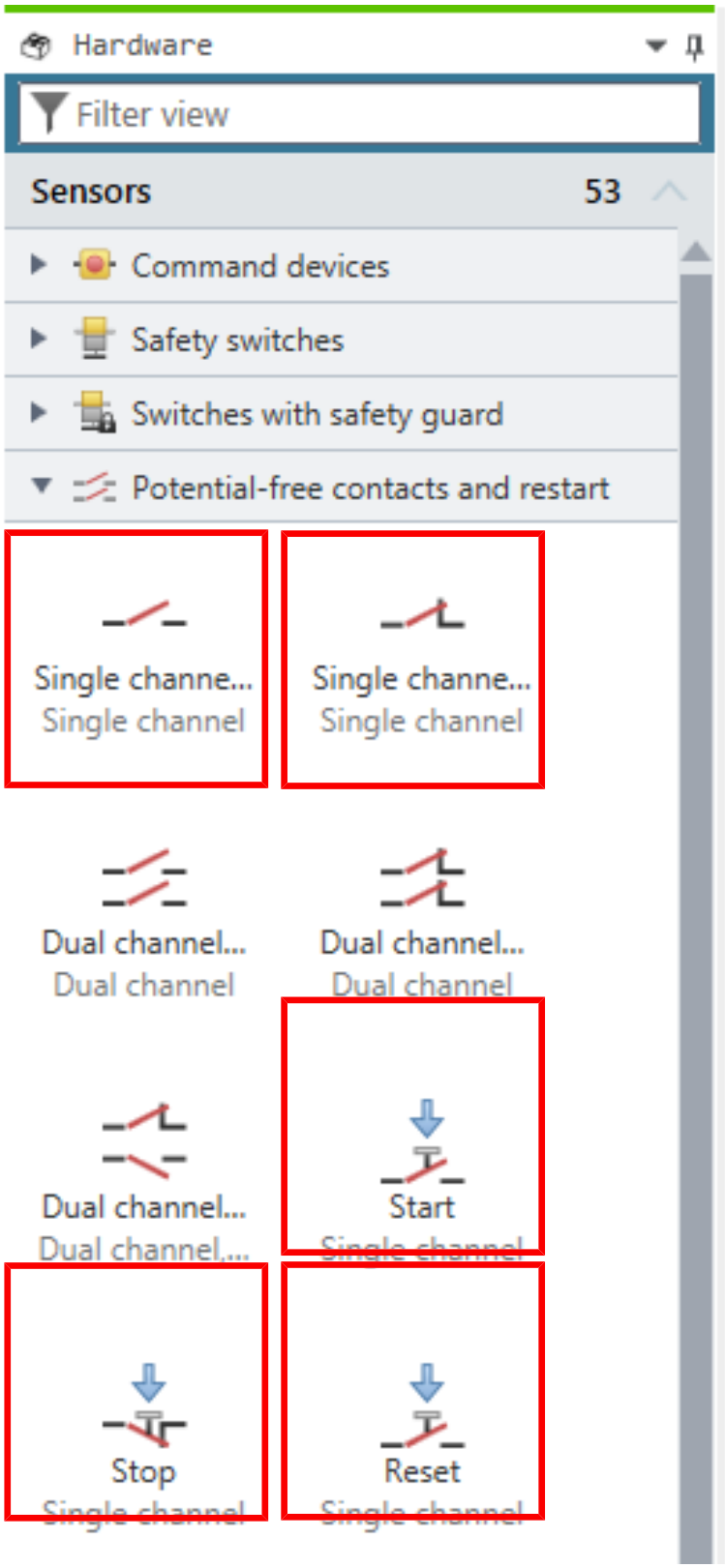

Fig. 18: single-channel inputs for the SP-DIO expansion module

3.8.2 Display elements and terminal assignment

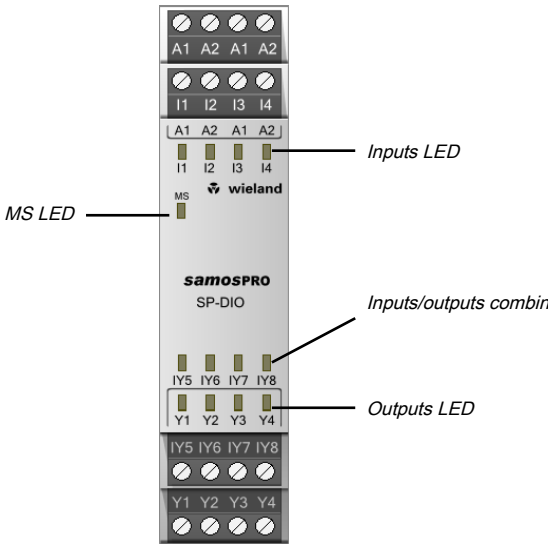

Fig. 19: Display elements of the SP-DIO module

Flashing codes

Further information: *Device state and LED displays in the standard input/output modules [ch. 10.3.3, p. 133]*

Terminal assignment

Tab. 15: SP-DIO terminal assignment reference

Terminal	Assignment
A1	24 V
A2	GND
I1–I4	non-secure inputs 1 to 4
IY5–IY8	non-secure inputs/outputs combination 5 to 8
Y1–Y4	non-secure outputs 1 to 4

3.8.3 Internal circuits

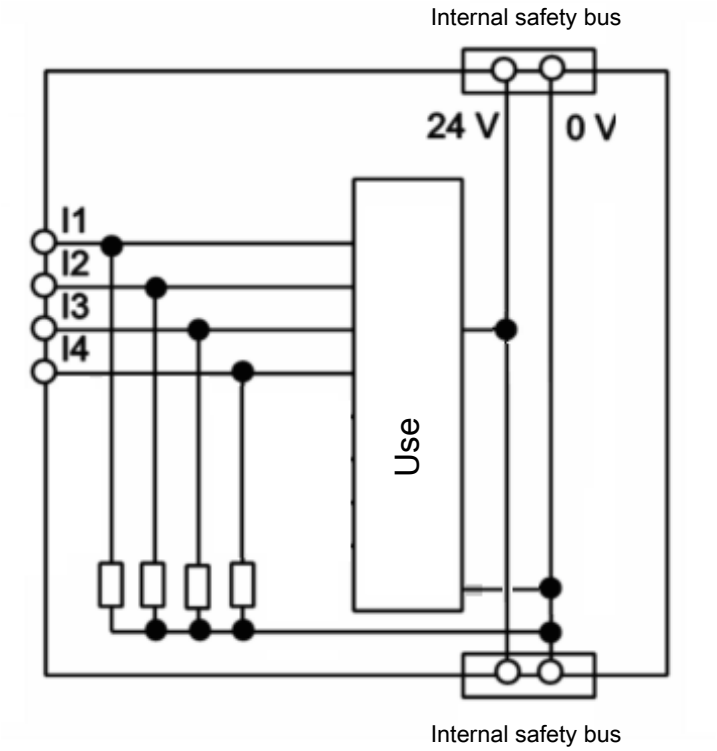

Fig. 20: Internal switching circuit of the SP-DIO module: non-secure inputs

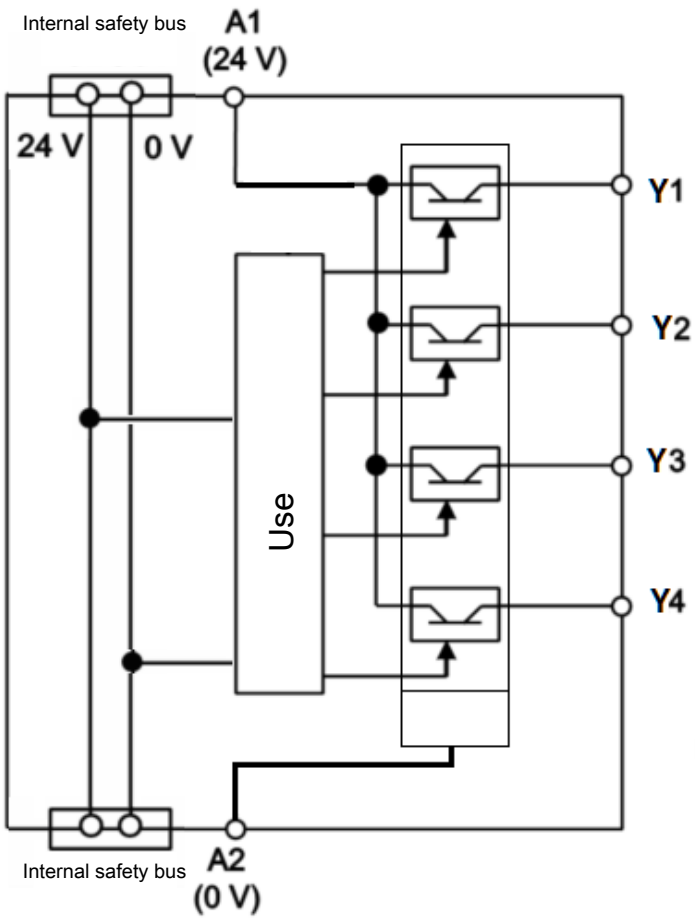

Fig. 21: Internal switching circuit of the SP-DIO module: non-secure outputs

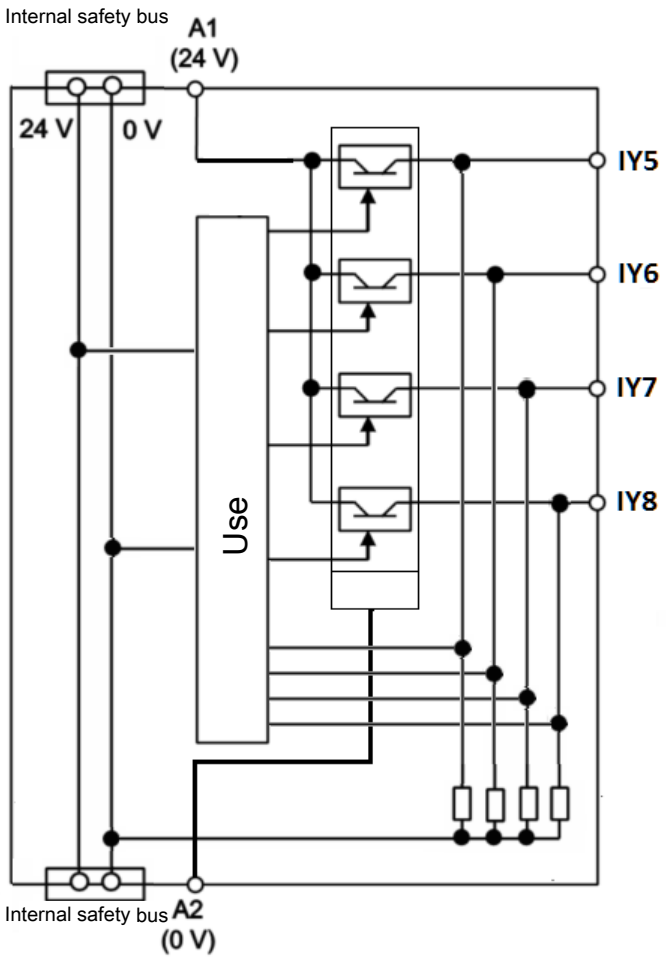

Fig. 22: Internal switching circuit of the SP-DIO module: non-secure inputs/outputs combination

WARNING

Use of the IY5–IY8 inputs/outputs

When using the combination connections as input, the signal input voltage to IY5–IY8 may never be greater than the supply voltage to A1/A2.

3.9 Analog extended input module SP-SAC4

3.9.1 Description

The SP-SAC4 module has 4 analog inputs for connecting sensors to a (0)4 – 20 mA interface.

The SP-SAC4 module offers the following functions:

- Monitoring connected analog sensors
- Forwarding analog input information to the controller module

Further information: *Connection of sensors and actuators [ch. 4, p. 52]*

Further information: *System response times [ch. 12.1, p. 139]*

The SP-SAC4 module cannot be operated alone; it always requires an SP-COP controller module (see samos® PLAN 6 programming software).

It is possible to use multiple SP-SAC4 modules simultaneously (see *System setup [ch. 3.2, p. 16]*).

The power for the internal logic and sensor is supplied via the internal SBUS interface.

3.9.2 Display elements and terminal assignment

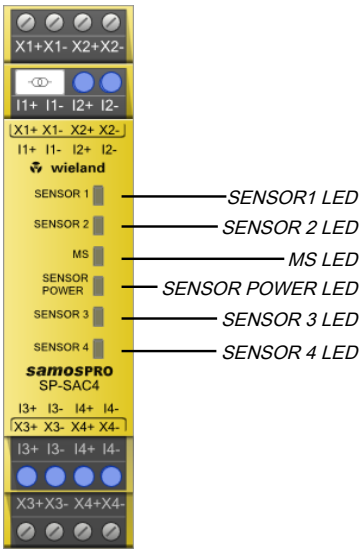

Fig. 23: SP-SAC4 module display elements

Further information: *Device state and LED displays in the safe input/output modules [ch. 10.3.2, p. 132]*

Tab. 16: SP-SAC4 terminal assignment

Terminal	Assignment
X1+ / X1-	Auxiliary voltage output 1
I1+ / I1-	Analog input 1 (current)
X2+ / X2-	Auxiliary voltage output 2
I2+ / I2-	Analog input 2 (current)
X3+ / X3-	Auxiliary voltage output 3
I3+ / I3-	Analog input 3 (current)
X4+ / X4-	Auxiliary voltage output 4
I4+ / I4-	Analog input 4 (current)

3.10 Analog extended input module SP-SAR4

3.10.1 Description

The SP-SAR4 module has 4 analog inputs for connecting sensors to an RTD interface (RTD = **R**esistive **T**emperature **D**etection) for temperature measurement (e.g. Pt100).

The SP-SAR4 module has the following functions:

- Monitoring connected analog sensors
- Forwarding analog input information to the controller module

Further information: *Connection of sensors and actuators [ch. 4, p. 52]*

Further information: *System response times [ch. 12.1, p. 139]*

The SP-SAR4 module cannot be operated alone; it always requires an SP-COP controller module (see samos® PLAN 6 programming software).

It is possible to use multiple SP-SAR4 modules simultaneously (see *System setup [ch. 3.2, p. 16]*).

The power for the internal logic and sensor is supplied via the internal SBUS interface.

3.10.2 Display elements and terminal assignment

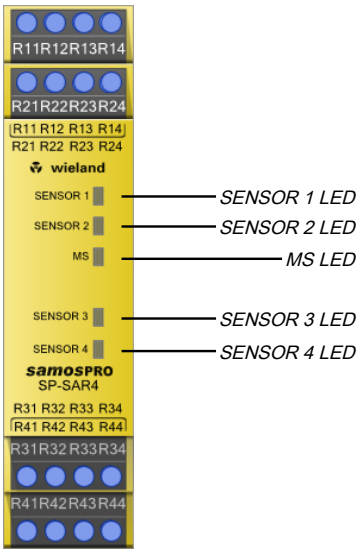

Fig. 24: SP-SAR4 module display elements

Further information: *Device state and LED displays in the safe input/output modules [ch. 10.3.2, p. 132]*

Tab. 17: SP-SAR4 terminal assignment

Terminal	Assignment
R11 / R12 / R13 / R14	Analog input 1 (RTD)
R21 / R22 / R23 / R24	Analog input 2 (RTD)
R31 / R32 / R33 / R34	Analog input 3 (RTD)
R41 / R42 / R43 / R44	Analog input 4 (RTD)

3.11 Analog extended input module SP-SACR22

3.11.1 Description

The SP-SACR22 module has 4 analog inputs for connecting 2 sensors to a (0)4 – 20 mA interface and 2 sensors with an RTD interface for temperature measurement (e.g. PT100)

The SP-SACR22 module has the following functions:

- Monitoring connected analog sensors
- Forwarding analog input information to the controller module

Further information: *Connection of sensors and actuators [ch. 4, p. 52]*

Further information: *System response times [ch. 12.1, p. 139]*

The SP-SACR22 module cannot be operated alone; it always requires an SP-COP controller module (see samos® PLAN 6 programming software).

It is possible to use multiple SP-SACR22 modules simultaneously (see *System setup [ch. 3.2, p. 16]*).

The power for the internal logic and sensor is supplied via the internal SBUS interface.

3.11.2 Display elements and terminal assignment

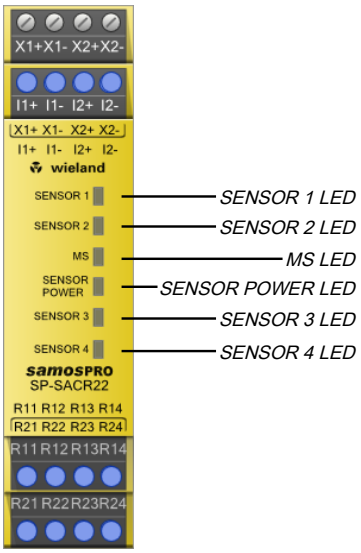

Fig. 25: SP-SACR22 module display elements

Further information: *Device state and LED displays in the safe input/output modules [ch. 10.3.2, p. 132]*

Tab. 18: SP-SACR22 terminal assignment

Terminal	Assignment
X1+ / X1-	Auxiliary voltage output 1
I1+ / I1-	Analog input 1 (current)
X2+ / X2-	Auxiliary voltage output 2
I2+ / I2-	Analog input 2 (current)
R11 / R12 / R13 / R14	Analog input 3 (RTD)
R21 / R22 / R23 / R24	Analog input 4 (RTD)

4 CONNECTION OF SENSORS AND ACTUATORS

This section describes how to connect safety sensors and actuators to the samos® PRO system and provides setup information for selected functions.

The samos® PRO system supports applications up to Performance Level PL e (as per EN ISO 13849-1) and up to Safety Integrity Level SIL CL3 (as per EN 62061).

The level of safety actually achieved depends on the external wiring, the implementation of the wiring, the parameterization, the selection of the safety sensors, and their arrangement on the machine. To this end, consider all of the required boundary conditions and evaluate them, for example, in a Failure Modes and Effects Analysis (FMEA).

You can find additional information to be noted during the electrical installation here: *Electrical installation [ch. 7, p. 122]*

Important notes

WARNING

Loss of safety function due to incorrect configuration!

The configuration must be carefully planned and executed!

The configuration of the safety application must be precisely adapted to the circumstances of the system or machine to be monitored.

- Check to ensure that the configured safety application monitors the machine or system as you have planned and whether the safety of a configured application is being ensured at all times. This must be ensured in all operating modes and for all sub-applications. Document the results of this test!
- Be sure to note the instructions for commissioning and daily testing in the operating instructions for the safety equipment integrated into the safety application.
- Note the warning information and function descriptions for the safety equipment connected to the safety controller! When in doubt, contact the respective manufacturer of the safety equipment.
- Note that the minimum switch-off time of the connected sensors must be greater than the execution time of the logic (see software handbook, Time values and logic execution time).
  In this way, you will ensure that the samos® PRO system can detect the switching of sensors.
  The minimum switch-off time of sensors is typically listed in the technical data for the sensors.

WARNING

Parallel connection of inputs

In general, the inputs may be connected in parallel. Inputs I13 to I16 are excluded from this. They may not be connected in parallel, neither to one another nor to other inputs.

WARNING

Protect single-channel inputs against short-circuits and cross-connections!

When a short-circuit to high occurs at a single-channel input with test pulses that were previously low, this signal can then look like a pulse for the logic. A short-circuit to high means that the signal is first to high and then is back to low after the error detection time. A pulse can be generated due to the error detection.

Because of this, note the following specifications for single-channel signals with test pulses:

- If the short-circuit to high occurs at a single-channel input with test pulses that was previously high, this signal for the logic then looks like a delayed falling edge (transition from high to low).
- If a single channel input is used and an unexpected pulse or delayed falling edge (High to Low) could lead to a risky situation at this input, then you must take the following measures:
  - Protected cabling for the signal in question (in order to prevent cross-connections with other signals)
  - No cross-connection detection, i.e. no connection to a test output.
    This must be noted in particular for the following inputs:

- Input reset at the function block reset
- Input restart at the function block restart
- Restart input at the function blocks for press applications (contact monitor, excenter, universal press contact monitor, cycle operation, press setup, single stroke monitoring, press automatic)
- Override input at a function block for muting
- Reset input at a function block for valve monitoring
- Reset inputs to zero and set to start value on a counter function block

NOTICE

- When using an odd-numbered test output, odd-numbered inputs must be used, while even-numbered inputs must be used when using an even-numbered test output.
- You have to use the test outputs of the same module at which the device to be tested has been connected.

Report function in the software

After project planning, you will receive a report in the samos® PLAN 6 software with the following content (Activate: Tab bar | View **Report**):

- Logic report
- Bill of materials
- Wiring information

Tab. 19: Excerpt from exemplary documentation in the samos® PLAN 6 software

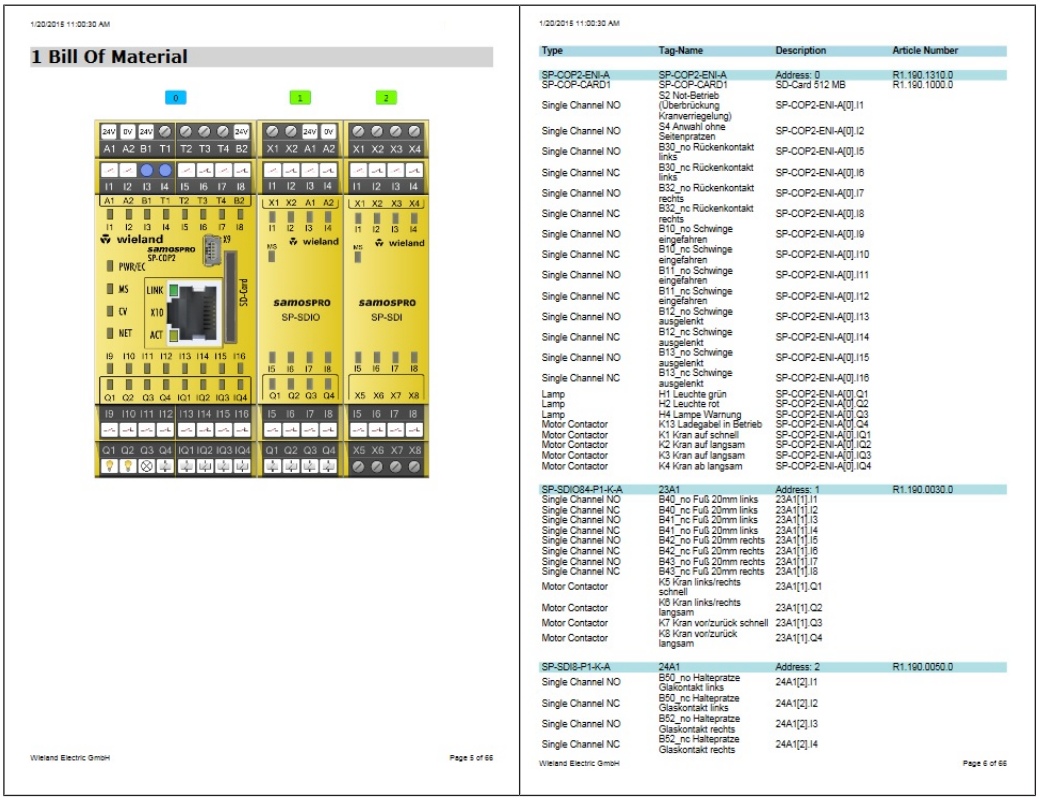

1/20/2015 11:00:30 AM

1 Bill Of Material

Wieland Electric GmbH

Page 5 of 66

1/20/2015 11:00:30 AM

Type	Tag-Name	Description	Article Number
SP-COP2-ENI-A	SP-COP2-ENI-A	Address: 0	R1.190.1310.0
SP-COP-CARD1	SP-COP-CARD1	SD-Card 512 MB	R1.190.1000.0
Single Channel NO	S2 Not-Betrieb (Überbrückung Kranverriegelung)	SP-COP2-ENI-A[0].I1	
Single Channel NO	S4 Anwahl ohne Seitenpratzen	SP-COP2-ENI-A[0].I2	
Single Channel NO	B30_no Rückenkontakt links	SP-COP2-ENI-A[0].I5	
Single Channel NC	B30_nc Rückenkontakt links	SP-COP2-ENI-A[0].I6	
Single Channel NO	B32_no Rückenkontakt rechts	SP-COP2-ENI-A[0].I7	
Single Channel NC	B32_nc Rückenkontakt rechts	SP-COP2-ENI-A[0].I8	
Single Channel NO	B10_no Schwinge eingefahren	SP-COP2-ENI-A[0].I9	
Single Channel NC	B10_nc Schwinge eingefahren	SP-COP2-ENI-A[0].I10	
Single Channel NO	B11_no Schwinge eingefahren	SP-COP2-ENI-A[0].I11	
Single Channel NC	B11_nc Schwinge eingefahren	SP-COP2-ENI-A[0].I12	
Single Channel NO	B12_no Schwinge ausgelenkt	SP-COP2-ENI-A[0].I13	
Single Channel NC	B12_nc Schwinge ausgelenkt	SP-COP2-ENI-A[0].I14	
Single Channel NO	B13_no Schwinge ausgelenkt	SP-COP2-ENI-A[0].I15	
Single Channel NC	B13_nc Schwinge ausgelenkt	SP-COP2-ENI-A[0].I16	
Lamp	H1 Leuchte grün	SP-COP2-ENI-A[0].Q1	
Lamp	H2 Leuchte rot	SP-COP2-ENI-A[0].Q2	
Lamp	H4 Lampe Warnung	SP-COP2-ENI-A[0].Q3	
Motor Contactor	K13 Ladegabel in Betrieb	SP-COP2-ENI-A[0].Q4	
Motor Contactor	K1 Kran auf schnell	SP-COP2-ENI-A[0].IQ1	
Motor Contactor	K2 Kran auf langsam	SP-COP2-ENI-A[0].IQ2	
Motor Contactor	K3 Kran auf langsam	SP-COP2-ENI-A[0].IQ3	
Motor Contactor	K4 Kran ab langsam	SP-COP2-ENI-A[0].IQ4	
SP-SDIO84-P1-K-A	23A1	Address: 1	R1.190.0030.0
Single Channel NO	B40_no Fuß 20mm links	23A1[1].I1	
Single Channel NC	B40_nc Fuß 20mm links	23A1[1].I2	
Single Channel NO	B41_no Fuß 20mm links	23A1[1].I3	
Single Channel NC	B41_nc Fuß 20mm links	23A1[1].I4	
Single Channel NO	B42_no Fuß 20mm rechts	23A1[1].I5	
Single Channel NC	B42_nc Fuß 20mm rechts	23A1[1].I6	
Single Channel NO	B43_no Fuß 20mm rechts	23A1[1].I7	
Single Channel NC	B43_nc Fuß 20mm rechts	23A1[1].I8	
Motor Contactor	K5 Kran links/rechts schnell	23A1[1].Q1	
Motor Contactor	K6 Kran links/rechts langsam	23A1[1].Q2	
Motor Contactor	K7 Kran vor/zurück schnell	23A1[1].Q3	
Motor Contactor	K8 Kran vor/zurück langsam	23A1[1].Q4	
SP-SDI8-P1-K-A	24A1	Address: 2	R1.190.0050.0
Single Channel NO	B50_no Halteprätze Glaskontakt links	24A1[2].I1	
Single Channel NC	B50_nc Halteprätze Glaskontakt links	24A1[2].I2	
Single Channel NO	B52_no Halteprätze Glaskontakt rechts	24A1[2].I3	
Single Channel NC	B52_nc Halteprätze Glaskontakt rechts	24A1[2].I4	

Wieland Electric GmbH

Page 6 of 66

4.1 Safety command devices and electromechanical safety switches

4.1.1 Emergency stop button

Tab. 20: Connection of safety command devices

Electrical connection: Example from samos® PLAN 6		
Single-channel, without testing	24V I1	Contact between 24 V and I1
Single-channel, with testing	T2 I2	Contact between T2 and I2
Two-channel, without testing	24V 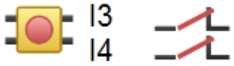 I3 I4	Channel 1: Contact between 24 V and I3 Channel 2: Contact between 24 V and I4
Two-channel, with testing	T1 T2 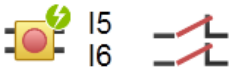 I5 I6	Channel 1: Contact between T1 and I5 Channel 2: Contact between T2 and I6

The pre-configured two-channel emergency stop buttons in samos® PLAN 6 have equivalent switching contacts. In order to implement two-channel complementary switching contacts, you can find corresponding elements in the element window under the group of potential-free contacts.

Tab. 21: Features

Function	Info
Testing	Possible
Series connection/ cascading	Max. number of emergency stop buttons switched in series: note max. line resistance of 100 Ω
Synchronous time	4 ms to 30 s or deactivated

NOTICE

You can find additional information in the operating instructions for the SNH emergency stop button.

4.1.2 Electromechanical safety switch without lock

Tab. 22: Electromechanical safety switch connection

Electrical connection: Example from samos® PLAN 6		
Single-channel, without testing	24V 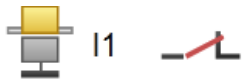 I1	Contact between 24 V and I1
Single-channel, with testing	T2 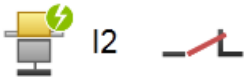 I2	Contact between T2 and I2
Two-channel, without testing	24V 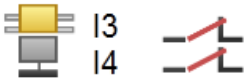 I3 I4	Channel 1: Contact between 24 V and I3 Channel 2: Contact between 24 V and I4
Two-channel, with testing	T1 T2 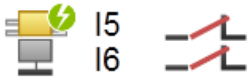 I5 I6	Channel 1: Contact between T1 and I5 Channel 2: Contact between T2 and I6

4.1.3 Electromechanical safety switch with lock

Tab. 23: Connection of locks

Electrical connection: Example from samos® PLAN 6		
Single-channel, without testing	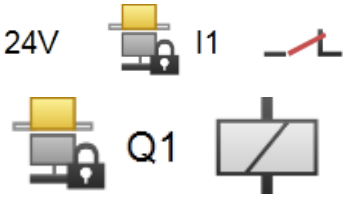	Contact between 24 V and I1 Inductor at Q1
Single-channel, with testing	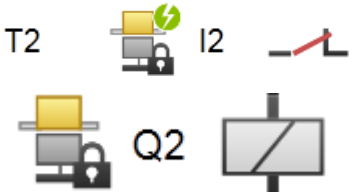	Contact between T2 and I2 Inductor at Q2
Two-channel, without testing	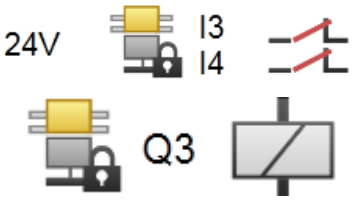	Channel 1: Contact between 24 V and I3 Channel 2: Contact between 24 V and I4 Inductor at Q3
Two-channel, with testing	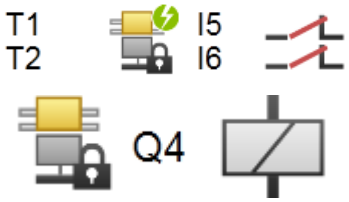	Channel 1: Contact between T1 and I5 Channel 2: Contact between T2 and I6 Inductor at Q4

Tab. 24: Functions with electromechanical safety switches and locks

Function	Info
Testing	Possible
Series connection/ cascading	The max. number of emergency stop buttons switched in series is determined by the max. line resistance of 100 Ω.
Synchronous time	4 ms to 30 s or deactivated

NOTICE You can find additional information in the operating instructions for the electromechanical safety switches.

4.1.4 Enable switch

Tab. 25: Enable switch connection

Electrical connection: Example from samos® PLAN 6		
2 positions, without testing		NC 1: between 24 V and I1 NC 2: between 24 V and I2
2 positions, with testing		NC 1: between T1 and I3 NC 2: between T2 and I4

Electrical connection: Example from samos® PLAN 6		
3 positions, without testing	24V I1 I2 24V I3 I4	NC 1: between 24 V and I1 NC 2: between 24 V and I2 NO 1: between 24 V and I3 NO 2: between 24 V and I4
3 positions, with testing	24V I5 I6 T1 T2 I7 I8	NC 1: between 24 V and I5 NC 2: between 24 V and I6 NO 1: between T1 and I7 NO 2: between T2 and I8

Tab. 26: Features

Function	Info
Testing	Possible
Series connection	Not possible
Synchronous time	4 ms to 30 s or deactivated

NOTICE You can find additional information in the operating instructions for the respective devices.

4.1.5 Two-hand control

Tab. 27: Two-hand control connection

Electrical connection: Example from samos® PLAN 6		
Type IIIA, without testing	24V III A I1 24V III A I2	Channel 1: Contact between 24 V and I1 Channel 2: Contact between 24 V and I2
Type IIIC, without testing	24V III C I5 24V III C I6 24V III C I7 24V III C I8	NC (normally closed contact) between 24 V and I5 (I7) NO (normally open contact) between 24 V and I6 (I8)

4.1.5.1 Type IIIA

With type IIIA, two equivalent inputs (make NC contacts for both two-hand buttons) are monitored.

A valid input signal is only generated when the ON state (H level) is present at both inputs within a time of 0.5 seconds (synchronous change, both two-hand buttons actuated) and both were previously in the OFF state (L level).

4.1.5.2 Type IIIC

With type IIIC, two pairs of equivalent inputs (NC (normally closed contact)/NO (normally open contact) contact pairs for both two-hand buttons) are monitored.

A valid input signal is only generated when the ON state (H/L level) is present at both inputs within a time of 0.5 seconds (synchronous change, both two-hand buttons actuated) and both were previously in the OFF state (L/H level).

NOTICE You can find additional information in the operating instructions for two-hand control.

4.1.6 Safety mats and bumper

Tab. 28: Safety mat connection

Electrical connection: Example from samos® PLAN 6		
Short-circuit-forming safety mat in 4-conductor technology, at test output	T1 T2 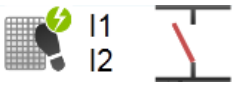 I1 I2	Channel 1: Contact between T1 and I1 Channel 2: Contact between T2 and I2
Short-circuit-forming multi-safety mat in 4-conductor technology, at test output	T1 T2 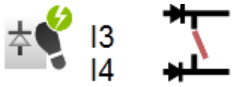 I3 I4	Channel 1: Contact between T1 and I3 Channel 2: Contact between T2 and I4

Tab. 29: Function of safety mats

Function	Info
Parallel connection	Possible
Series connection	Possible

Switch-off conditions

WARNING

Make sure that the switch-off condition is sufficient!

The actuation period for safety mats and bumper must be at least twice as high as the maximum value for the "test period" of both test outputs used in order to ensure that the switch-off condition will be detected and that a sequencing error will not occur.

NOTICE You can find additional information in the operating instructions for the safety mats.

Test periods and response times

WARNING

Changed reaction times!

From module version D-03.01 of the SP-COP modules and B-08 of the SP-SDIO modules, the longer response times given in the table below apply.

In particular, for existing projects with sensor elements for safety mats and bumpers, this extension of the response times must be adhered to (e.g. in the case of replacement of a SP-COP module).

Tab. 30: Test periods and response times

Test periods for both test outputs [ms][1]		Resulting additional response time [ms]	
Test output 1	Test output 2	SP-SDIO (to B-07) SP-COP (to D-01.xx)	SP-SDIO (from B-08) SP-COP (from D-03.xx)
40	40	20	40
40	200–1000	40	80
200	200	100	200
200	400–1000	200	400
400	400	300	400

Test periods for both test outputs [ms][1]		Resulting additional response time [ms]	
Test output 1	**Test output 2**	**SP-SDIO (to B-07)** **SP-COP (to D-01.xx)**	**SP-SDIO (from B-08)** **SP-COP (from D-03.xx)**
400	600 800–1000	400 400	600 800
600	600	500	600
600	800 1000	600	800 1000
800	800	700	800
800	1000	800	1000
1000	1000	900	1000

[1] Obtain the values from the report in samos® PLAN 6.

4.1.7 Connection of multiple safety mats/bumpers

When multiple safety mats/bumpers are used to improve diagnosis, it may be wise to decouple the test pulse outputs.

4.1.8 Operation mode selection switch

Electrical connection: Example from samos® PLAN 6		
Operating mode selection switch (1 from 2) to 24 V	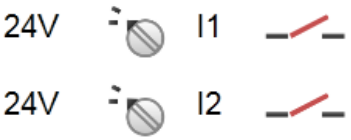	Channel 1: Contact between 24 V and I1 Channel 2: Contact between 24 V and I2
Operating mode selection switch (1 from 2) to test output	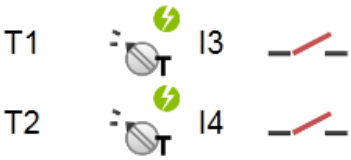	Channel 1: Contact between T1 and I3 Channel 2: Contact between T2 and I4

Function	Info
Testing	Possible

NOTICE

- Operating mode selection switches without test pulses enable 2 to 8 operating modes; operating mode selection switches with test pulses enable 2 to 4 operating modes.
- When wiring the tested operating mode selection switches, note that when using an odd-numbered test output (e.g. T1, T3 ... or X1, X3 ...), odd-numbered inputs (e.g. I1, I3, I5 ...) must be used; when using an even-numbered test output (e.g. T2, T4 ... or X2, X4 ...), even-numbered inputs (e.g. I2, I4, I6 ...) must also be used.
- You can find additional information in the operating instructions for the operating mode selection switches.

4.1.9 Potential-free contacts

The samos® PLAN 6 software provides a series of potential-free contacts for "free" designing of contact elements. In this manner, you can implement different NO (normally open contact)/NC (normally closed contact) combinations with and without testing. In addition, there are elements for a start and stop button, reset button, and device monitoring (EDM).

Tab. 31: Function of potential-free contacts

Function	Info
Testing	Possible
Series connection	Possible
Discrepancy time	Further information: Software manual

4.2 Contactless safety sensors

4.2.1 Magnetic safety switches

4.2.1.1 Magnetic safety switches with equivalent inputs

Tab. 32: Connection of magnetic safety switches with equivalent inputs

Electrical connection: Example from samos® PLAN 6		
With testing	T1 T2 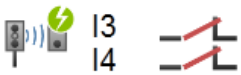 I3 I4	Channel 1: Contact between T1 and I3 Channel 2: Contact between T2 and I4

4.2.1.2 Magnetic safety switches with complementary inputs

Tab. 33: Connection of magnetic safety switches with antivalent inputs

Electrical connection: Example from samos® PLAN 6		
With testing	T1 T2 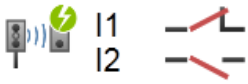 I1 I2	NO contact between T1 and I1 NC contact between T2 and I2

Tab. 34: Functions with magnetic safety switches

Function	Info
Testing	Possible
Series connection/ cascading	Possible, note max. line resistance of 100 Ω and correct setting of test pulse time
Synchronous time	Preset at 1500 ms

NOTICE You can find additional information in the operating instructions for the magnetic safety switches.

4.2.2 Inductive safety switches

Tab. 35: Inductive safety switch connection

Electrical connection: Example from samos® PLAN 6		
Inductive switch (serial)	T1 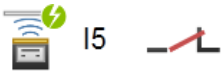 I5	Test input TE at T1 Output A at I5
Inductive switch	24V 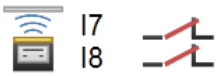 I7 I8	OSSD1 on I7 OSSD2 on I8

Tab. 36: Functions with inductive safety switches

Function	Info
Testing	Necessary with serial inductive switches
Series connection/ cascading	**Inductive switches (serial):** Up to six sensors per input. Maximum OFF-ON delay of the cascade is 10 ms (otherwise, the test gap will lead to switch-off). Note the maximum line resistance of 100 Ω and the correct setting of the test pulse time. **Inductive switch:** No cascading possible

NOTICE You can find additional information in the operating instructions for the inductive safety switches.

4.2.3 Transponder switches

Tab. 37: Transponder connection

Electrical connection: Example from samos® PLAN 6		
With OSSD		OSSD1 at I1 OSSD2 at I2

Tab. 38: Functions with transponders

Function	Info
Series connection/ cascading	Possible, depending on type used

NOTICE You can find additional information in the operating instructions for the respective transponder switch.

4.3 Testable single-beam safety light barriers

4.3.1 Testable type 2 single-beam safety light barriers

Tab. 39: Connecting testable type 2 single-beam safety light barriers

Electrical connection: Example from samos® PLAN 6		
SLB type 2	T1 I3	Test input TE (transmitter) at T1 Output Q (receiver) at I3

WARNING

Note the safety information and protective measures.

Route the transmitter and receiver lines outside of the switchbox so that a short-circuit between these lines can be avoided, e.g. route them separately in separate sheathed cables or protected areas.

Tab. 40: Functions with testable type 2 single-beam safety light barriers

Function	Info
Testing	Possible
Series connection/ cascading	Possible, depending on the safety light barrier type used Note the correct setting of the test pulse time: Maximum OFF-ON delay of the cascade is 10 ms (otherwise, the test gap will lead to switch-off). Note the maximum line resistance of 100 Ω.

NOTICE

You can find additional information in the operating instructions for the type 2 single-beam safety light barriers.

4.3.2 Testable type 4 single-beam safety light barriers

Electrical connection: Example from samos® PLAN 6		
SLB type 4	T2 I4	Test input TE (transmitter) at T2 Output Q (receiver) at I4

WARNING

Route the transmitter and receiver lines outside of the switchbox so that a short-circuit between these lines can be avoided, e.g. route them separately in separate sheathed cables or protected areas.

Tab. 41: Functions with testable type 4 single-beam safety light barriers

Function	Info
Testing	Required
Series connection/ cascading	Maximum of seven pairs per inputs Note the maximum line resistance of 100 Ω.

NOTICE

You can find additional information in the operating instructions for the type 4 single-beam safety light barriers.

4.3.3 Customer-specific testable single-beam safety light barriers

You can find additional information on creating customer-specific elements in the software manual.

NOTICE

- Select the minimum value for the desired test gap in the settings of the customer-specific element dialog.
- Regardless of the test gap, the entire OFF-ON delay of the cascade must be less than the maximum OFF-ON delay of the respective test output (see *Response times for basic safety functions [ch. 12.1, p. 139]*) -2 ms. Otherwise, the test gap will cause a switch-off. For safe input/output modules, this value = 12 ms - 2 ms = 10 ms.
- Use a screened or separate cable for the connections from the test output of the module (X1 to X8) to the test input of the transmitter and from the output of the receiver to the safe input of the module (I1 to I8). Otherwise, a short-circuit between the signals may prevent error detection by this test.

4.3.4 Information on installing testable single-beam safety light barriers

NOTICE

Note the installation information in the operating instructions for the respective sensors and particularly the following points:

- Single-beam safety light barriers may only be used as access protection in accordance with EN ISO 13855. They may not be used as finger or hand protection.
- Maintain the minimum distance to reflective surfaces.
- The safety distance between the light beam and the danger point for the access protection must absolutely be adhered to.

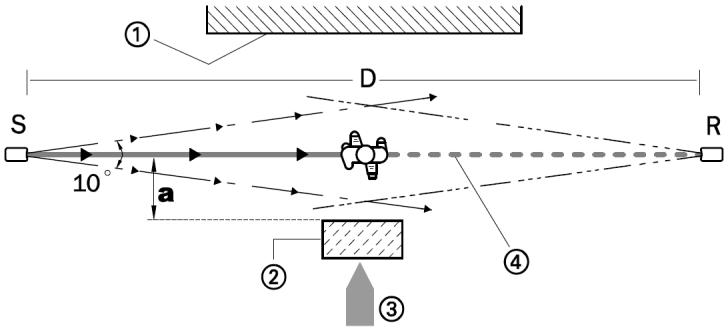

Fig. 26: Minimum distance "a" to reflective surfaces, correct installation, and alignment

S = transmitter R = receiver D = distance between transmitter and receiver

1 = border to the hazardous area

2 = reflective surface

3 = entry direction to the hazardous area

4 = optical axis

a = minimum distance to reflective surface

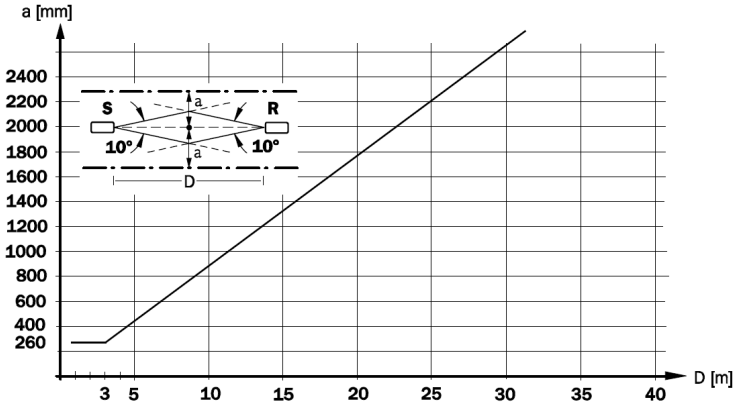

Fig. 27: Minimum distance "a" as a function of distance "D" for testable single-beam safety light barriers with 10° aperture angle

NOTICE

Diagrams of the safety light barriers can be found in the respective operating instructions.

NOTICE

Avoid interaction between single-beam safety light barriers and between cascades

- If multiple single-beam safety light barrier pairs are used, the aperture angle of the sensors must absolutely be noted in order to prevent interaction.
- If the transmitter is only installed on one side, the light beams must not overlap on the receiver side so that the light beam of the transmitter reaches two receivers.
- With reciprocal installation of the transmitter and receiver, ensure that the light beam of transmitter S1 cannot be received by receiver R3 and that the light beam of transmitter S3 cannot be received by receiver R1.

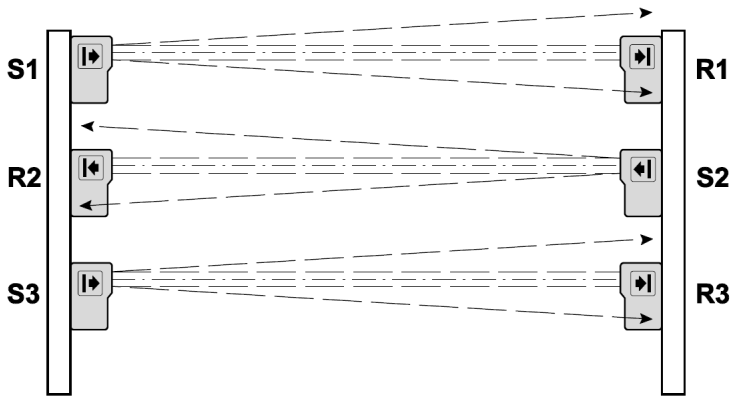

Fig. 28: Installation so as to prevent optical interaction

4.4 BWS – Contactless Safety Devices

Tab. 42: BWS connection

Electrical connection: Example from samos® PLAN 6		
SLC-2	24V 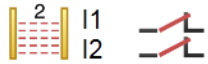	OSSD1 (receiver) at I1 OSSD2 (receiver) at I2
SLC-4, SLD-4	24V 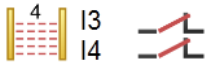	OSSD1 (receiver) at I3 OSSD2 (receiver) at I4
Laser scanner BWS type 3	24V 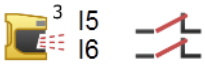	OSSD1 (receiver) at I5 OSSD2 (receiver) at I6

NOTICE You can find additional information in the operating instructions for the respective BWS.

4.5 Motion monitoring

Tab. 43: Connecting sensor elements for motion monitoring

	Proximity sensor, single-channel, A 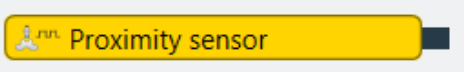
	1 proximity sensor, antivalent, A, A/ 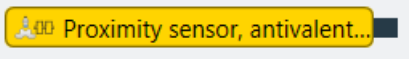
	Proximity sensor, 2-channel, A, B, 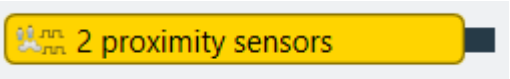
	2 proximity sensors, 2-channel, antivalent, A, A/, B, B/
	HTL encoder with 2 tracks, A, B
	HTL encoder with 2 tracks, antivalent, A, A/, B, B/ 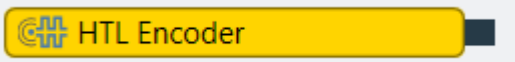
	SENC HTL encoder of Wieland Electric with 2 tracks, A B

	HTL encoder of Wieland Electric with 2 tracks, antivalent, A, A/, B, B/

Important notes

WARNING

Observe the screen specifications

- Use screened lines for connecting the sensor elements.
- We recommend the WST…/T35 screen grounding terminal for grounding the screen on samos® PRO.
- Position the screen grounding terminal as close to the module as possible and keep the stripped ends for connection to the module as short as possible.

NOTICE

Recommendation for sensors and line lengths

The maximum line length between sensor and module is dependent, to a large extent, on the output type of the sensor. To achieve a good and as fault-free transmission as possible, we recommend, besides a cable grounded and screened on both sides, using sensors with push-pull outputs.

- Sensor with Open Collector output (positive-switching): max. 15 m
- Sensor with Push-pull output: max. 50 m

4.5.1 Sensors and hardware

4.5.1.1 Basic information on proximity sensors and toothed discs

Rotational and linear movements can be detected using proximity sensors and toothed discs or racks.

The number of teeth determines the resolution, e.g. 9 teeth per revolution. The ratio between the tooth and gap and the switching behavior of the sensor determines the pulse-pause ratio of the sensor signal. The width of a tooth should correspond at least to the diameter of the sensor detection range. See the datasheets of the relevant sensor manufacturer for the mechanical construction.	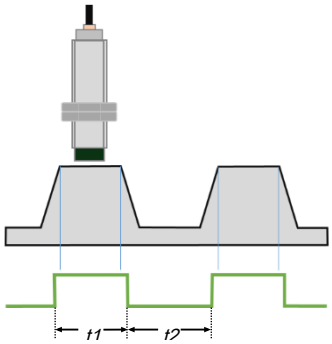

Calculation of the input signal frequency of initiators • X = number of teeth on the disc for NO • X = number of gaps on the disc for NC • N = speed of shaft in rpm • N / 60 = revolutions per second • F: Frequency	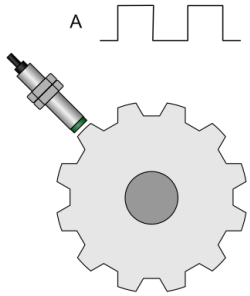 **F = X * N / 60** Example • Speed = 300 rpm • Number of teeth = 9 • F= 300/60*9 = **45 Hz**
Calculation of the input signal frequency of encoders • X = number of pulses per revolution according to data sheet of the encoder • N = speed of shaft in rpm • N / 60 = revolutions per second • F: Frequency	 **F = X * N / 60** Example • Speed = 300 rpm • Number of impulses/revolution = 512 • F= 300/60*512 = **2.56 kHz**

NOTICE

Minimum pulse or pause times at an input frequency of less than 1200 Hz

Up to an input frequency of 1200 Hz, the pulse and pause duration of an input signal must be greater than 200 µs. This means that at 1200 Hz, the duty cycle must be ≥ 25%.

4.5.1.2 Sensor requirements

The following sensors for motion monitoring are supported:

- Number of signal lines (a maximum of 4 can be connected to I13-I16)
- Behavior in an active state (NC or NO contact)
- Type of output signal (HTL only, no TTL or sin/cos)
- Electro-technical properties and internal circuit of the outputs
  - Open Collector (only positive switching or PNP, often with proximity switches)
  - Push Pull (common with encoders)
- Physical measuring method of the sensor (no limitation)

For reasons of availability, sensors should be selected which have the highest possible hysteresis of the switching point.

4.5.1.2.1 Number of signal lines

In the case of motion monitoring sensors, a distinction is made between 4, 2 and 1-track sensors.

Signal line A	Periodical square wave signal whose period duration is proportional to the rotational speed (rotary encoders) or linear movement (linear encoders).

Signal line B	A signal phase-shifted by 90°, for example, in relation to signal A with the same properties as signal A.
Signal line A/	A signal phase-shifted by 180° in relation to signal A. Also known as inverted signal A.
Signal line B/	A signal out of phase to signal B by 180°. Also known as inverted signal B.
Signal line Z	Only for rotary encoders: Periodical square wave signal generated once every revolution. This signal is also called an index signal and is currently not recognized by our safe motion monitoring system.
Signal line Z/	Only for rotary encoders: A signal phase-shifted by 180° in relation to signal Z. This signal is also called inverted signal Z and is currently not recognized by our safe motion monitoring system.
Screen	The screen braid is only available on screened sensors. Typically, rotary encoders have screened cables and proximity sensors have unscreened cables. The screen is an important component in preventing potential interference and ensuring compliance with EMC standards.

4.5.1.2.2 Pulse-pause ratio

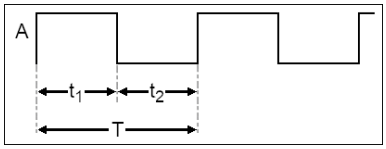

Fig. 29: Pulse-pause ratio

t_1 = duration of the active pulse

t_2 = duration of the inactive pulse

Definition of pulse-pause ratio: t_1:t_2

Definition of duty cycle: t_1/T*100

The duty cycle corresponds to the proportion of the active pulse over the entire period.

The ideal pulse-pause ratio of the sensor signal is 1:1 (duty cycle of 50%). However, SP-COP can also process other pulse-pause ratios with the following limits:

The **low frequencies** are determined with measuring method 1, which measures the length of the signal period.
The **high frequencies** are determined with measuring method 2 by counting the number of edges per measuring interval.

The measuring accuracy of both measuring methods makes it necessary to change the applied measuring method at a certain frequency (see following table).
A prediction of the approximate measurement accuracy for the signal frequency belonging to a monitoring limit is made in samos® PLAN 6 when configuring the functional component.

Tab. 44: 1-track sensors

1-track sensors	**Measuring method 1 Low frequencies**		**Measuring method 2 High frequencies**	
Measuring interval[1] [ms] Greater than or equal to …	**Frequency [Hz] 0.1 to …**	**Minimum duty cycle (%)**	**Frequency [kHz] up to …**	**Minimum duty cycle (%)**
4	1118	23 %	70	35 %
8	791	16 %	70	35 %
16	559	12 %	70	35 %
24	456	10 %	70	35 %

1-track sensors	Measuring method 1 Low frequencies		Measuring method 2 High frequencies	
Measuring interval[1)] [ms] Greater than or equal to …	Frequency [Hz] 0.1 to …	Minimum duty cycle (%)	Frequency [kHz] up to …	Minimum duty cycle (%)
36	373	8 %	70	35 %
68	271	6 %	70	35 %
172	170	4 %	70	35 %
1000	71	2 %	70	35 %
[1)] Further information: Manual "samos® PLAN 6 Software", Measuring interval and speed measurement				

In the case of **low frequencies**, it must be taken into consideration that the minimum pulse duration for t_1 and t_2 may not be less than 200 µs if the pulse-pause ratio deviates from 1:1.

In the case of **high frequencies**, it must be ensured that the pulse-pause ratio t_1 and t_2 supplied by the sensor may not fall below the minimum pulse duration of 5 µs each.

Minimum duty cycle [%] = minimum pulse duration [s] * max. frequency [Hz] * 100

Flat duty cycle of 35% applies to 1-track sensors in the entire application range up to 70 kHz. If the application is always in the low frequency range, a lower duty cycle can be used; see the table above.

Tab. 45: 2-track sensors

2-track sensors	Measuring method 1 Low frequencies		Measuring method 2 High frequencies	
Measuring interval[1)] [ms] Greater than or equal to …	Frequency [Hz] 0.1 to …	Minimum duty cycle (%)	Frequency [kHz] up to …	Minimum duty cycle (%)
4	559	12 %	70	35 %
8	395	8 %	70	35 %
12	323	7 %	70	35 %
20	250	6 %	70	35 %
60	144	3 %	70	35 %
400	56	2 %	70	35 %
[1)] Further information: Manual "samos® PLAN 6 Software", Measuring interval and speed measurement				

Minimum duty cycle [%] = minimum pulse duration [s] * max. frequency [Hz] * 100

Flat duty cycle of 35% applies to 2-track sensors in the entire application range up to 70 kHz. If the application is always in the low frequency range, a lower duty cycle can be used; see the table above.

4.5.1.2.3 Antivalent signals

NOTICE

In the case of sensors with antivalent signals (A and A/), the phase shift between these antivalent signals at the input terminals must not exceed 150 µs across the entire frequency range. Otherwise a discrepancy fault is detected.

The following graphic shows an example of a trailing signal A/. A signal to A / lagging signal A is also permitted in the scope of the specified time difference.

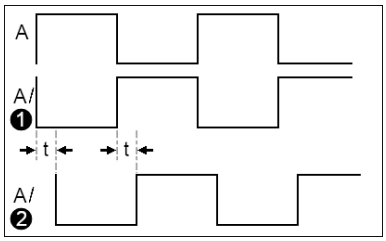

Fig. 30: Phase shift between antivalent signals

A and A/ [1]	Ideal status: A and A/ as antivalent signals without a phase shift of the edges
A and A/ [2]	Phase shift t between the antivalent signals If t>150 µs, then discrepancy fault

4.5.1.2.4 Phase shift

Direction detection is possible on sensors with 2 phase-shifted signal lines (e.g. A and B). A phase shift of 90° between the two signals is ideal.

Encoders usually have a phase shift of 90°. In the case of proximity sensors on toothed discs, for example, the mounting position of the two sensors relative to the toothed disc determines the phase shift.

The following limits apply for the phase shift between signals A and B:

Frequency of input signals	Minimum chronological interval of edges t_1 and t_2 See diagram below
up to 4500 Hz	t_1 > 200 µs and t_2 > 200 µs
from 4500 Hz	t_1 > 5 µs and t_2 > 5 µs

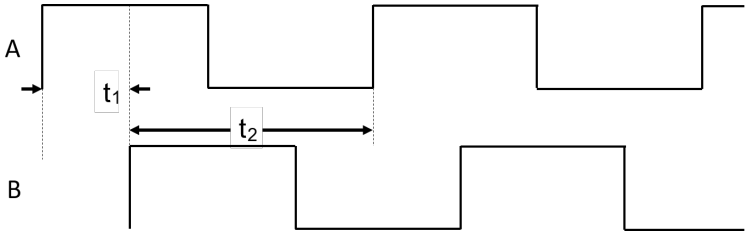

Fig. 31: Minimum chronological interval of edges t_1 and t_2

Note: Inductive and capacitive effects on the supply lines may distort signal sequences at the signal edges, which changes the phase shift between the A and B signals as a result. The abovementioned limits apply to ideal square wave signals or to the transitions between Low and High.

Signal sequence

In the case of two-track AB sensors, the pulses must be in a certain sequence and observe the following rules:

- Rising edge B follows rising edge A or vice versa.
- Falling edge B follows rising edge A or vice versa.
- Edge A follows edge B or vice versa.

Correct sequence:

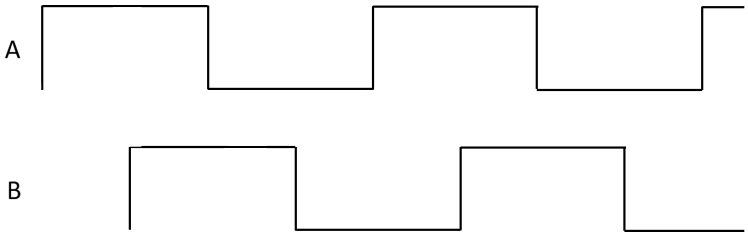

Incorrect sequence:

Track B has two following edges, while track A remains constant at High or Low.

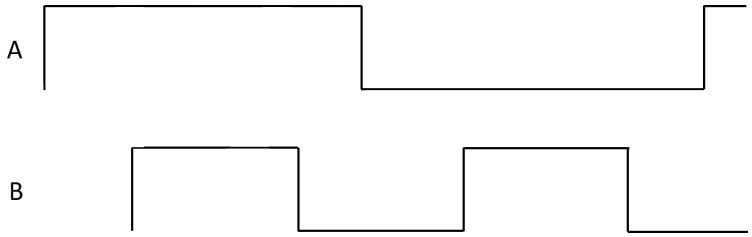

With this incorrect signal sequence, the first two rules are followed. However, a complete pulse period runs from track B, while track A remains constantly on High.

The only application in which one track generates edges while the other track remains constant is the "vibration at a standstill" application. Here, use the vibration filter. Further information in the software manual, chapter "Vibration filter".

NOTICE

When designing and constructing a mechanism with proximity sensors, you must observe the requirements for "pulse-pause ratio" or "duty cycle", "antivalent signals", "phase shift" and "signal sequence" and take them into consideration under all circumstances.

If these points are not observed, a samos® PRO system with motion monitoring will not function.

Rotational direction

The rotational direction can be determined by signal B which has a fixed, structurally-defined phase shift in relation to signal A. The view looking onto the shaft is used for the definition:

- Clockwise rotation = right rotation = signal A in advance of signal B
- Counterclockwise rotation = left rotation = signal A after signal B

You can find additional information about evaluating the rotational direction here: Software manual (BA000967), chapter "Safe direction (SDI)"

On encoders with a flange, please note that when looking on to the flange from the sensor, the rotational direction is the other way round.

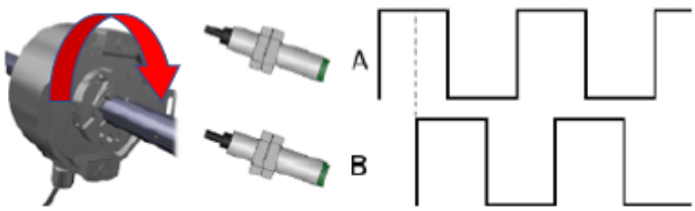

Fig. 32: Example: Direction of rotation of an axis having an encoder with leading signal A (clockwise rotation)

4.5.1.2.5 NC and NO contacts

Normally open (NO) **Normally open (NO)**		When activated, the sensor switches on.
Normally closed (NC) **Normally closed (NC)**	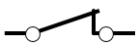	When activated, the sensor switches off.
NC/NO contacts **(NO/NC)**	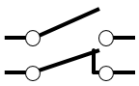	When activated, the sensor switches both outputs

4.5.1.2.6 Signal form and threshold values

The samos® PRO controllers initially detect voltage changes at input terminals I13 to I16 regardless of their chronological sequence. The electronics and firmware interpret every level change as an **impulse** with reference to the following limits:

Open Collector (OC) input	U_{high} = 15 to 30 V I_{high} = 3 to 8 mA U_{Low} = 0 to 10 V f_{input} = 0.1 to 5 kHz $t_R \leq 0.05 * t_{Impulse}$ $t_F \leq 0.05 * t_{Impulse}$
Push Pull (PP) input	U_{high} = 15 to 30 V I_{high} = 3 to 8 mA U_{low} = 0 to 5 V I_{low} = -3 to -8 mA f_{input} = 0.1 to 70 kHz $t_R \leq 0.05 * t_{Impulse}$ $t_F \leq 0.05 * t_{Impulse}$

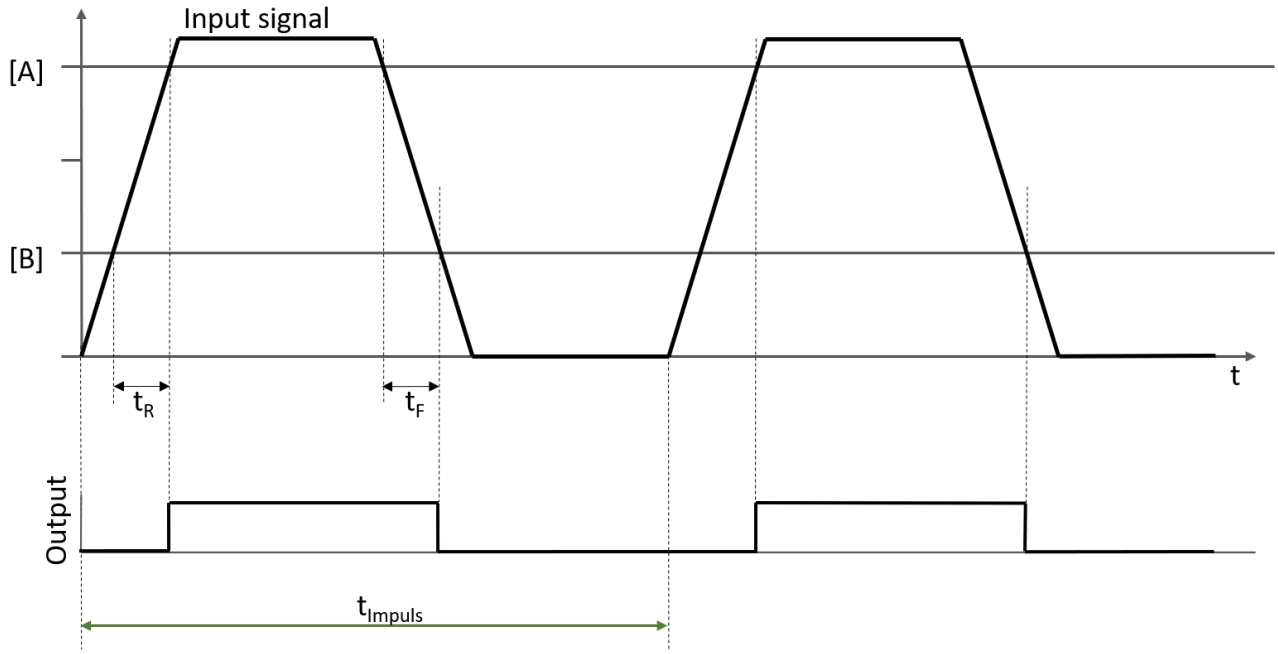

Fig. 33: Schmitt trigger circuit (threshold value circuit) in the controller

[A] U_{high}	High threshold	[B] U_{Low}	Low threshold
T_R	Rise time	T_F	Fall time
$T_{impulse}$	Period time of an impulse		

4.5.1.2.7 Sensors with Open Collector outputs

On sensors with open collector outputs, the power supply (positive or negative, see PNP and NPN) is connected to the output when in an active state.

- On PNP sensors, the output is connected to the positive operating voltage when in an active state (on **high-side** open collector).

- On NPN sensors, the output is connected to the negative operating voltage when in an active state.

NOTICE

The samos® PRO MOTION modules only support sensors with a PNP output or positive-switching output.

NOTICE

On sensors with an open collector output, a distinction is not made between a complete cable break and an inactive state and so the break cannot be detected.

If a so-called stuck-at-low error occurs, the signals at the input of the controller module remain at low level.

- Possible fault exclusion: Use of a push-pull sensor.

WARNING

Open Collector configuration

- Only use the "Open Collector" configuration if the sensor used absolutely requires it.
- The "Open Collector" configuration reduces the SFF and thus the safety characteristics for certain sensor combinations!
- If in doubt, use the "Open Collector with Stuck-At-Low" configuration if the sensor technology is suitable for this purpose (proximity sensors from some manufacturers do not support this option).

Sensors with a PNP or NPN output are usually designed in 3-conductor technology (power supply, 0V and output Q).

Sensors with antivalent outputs (NO and NC contacts) are usually designed in 4-conductor technology (power supply, 0V, output Q and output Q/).

4.5.1.2.8 Sensors with push-pull outputs

On sensors with push-pull outputs, a cable break can be detected directly.

This detection function is essential on sensors without an antivalent track. Only then can a cable break be clearly distinguished from a standstill at the signal levels.

NOTICE

Cable break detection is generally safety-relevant because a distinction cannot be made between a starting axis with a disconnected sensor plug and a stationary axis

Note: Most HTL encoders operate with push-pull outputs, although this is not an essential feature. Check the output circuit of the sensors you are using!

4.5.1.3 Connection and wiring

4.5.1.3.1 Information on connecting sensors

Sensor cables connected to samos® PRO are predominantly visualized in this section.

General recommendations

- Connect the screen to the PE in the control cabinet.
- Connect the screen with PE to the sensor housing.
- Screen the signal line all the way up to the grounded screen terminal in the control cabinet.
- All open or unused lines must be connected according to the sensor manufacturer's data sheet.

Unassigned inputs

Inputs I13, I14, I15 and I16 may only be used with sensors for motion monitoring. No standard sensors or switching contacts may be connected.

Example:

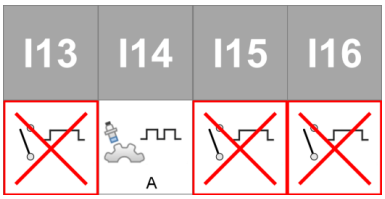

Fig. 34: Single-channel proximity switch (A) at I14, no other standard sensors or switching contacts may be connected to inputs I14, I15 and I16.

4.5.1.3.2 Options for connecting the sensors to the controller module

Sensor type	Max. number of sensors in the project	Connection terminals			
		I13	I14	I15	I16
Proximity sensor (A)	2		A1		A2
Proximity sensor, antivalent (A,A/)	2	A1	A2	A1/	A2/
2 proximity sensors (A,B)	2	A1	A2	B1	B2
2 proximity sensors, antivalent (A, A/, B,B/)	1	A	A/	B	B/
HTL incremental encoder (A,B)	2	A1	A2	B1	B2
HTL incremental encoder, antivalent (A,A/, B,B/) SENC	1	A1	A1/	B1	B1/

Note: samos® PLAN 6 helps you with project planning and allows the creation of the connections and configurations mentioned above from different sensor combinations. Please use samos® PLAN 6 to check whether the required connection combination is permitted.

4.5.1.3.3 Connection of proximity sensors

Proximity sensors with a PNP output and a 3 or 4-wire connection can be connected to the controller modules.

Please note the following information:

- Use 2 sensors with an A signal and phase-shifted B signal to detect the direction of rotation or travel.
- For higher safety, also use the antivalent signals of proximity sensors.

4.5.1.3.3.1 Example: Connection of 2 × 1 proximity sensors with track A

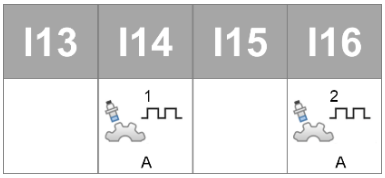

Fig. 35: Two proximity sensors

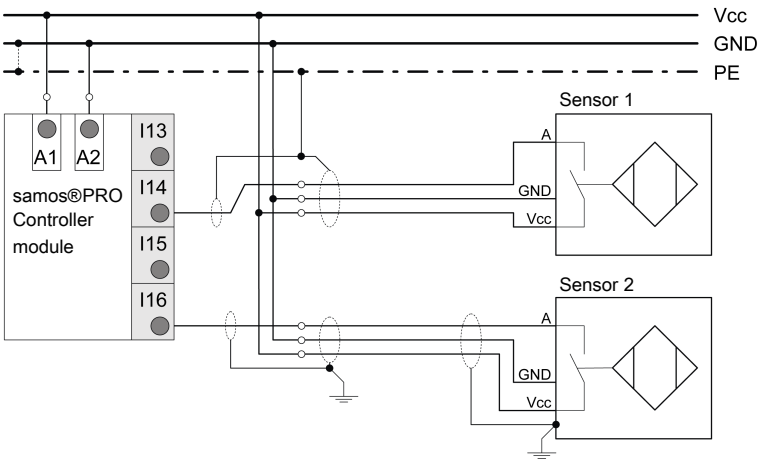

Fig. 36: Example: Two proximity sensors (2 × A)

4.5.1.3.3.2 Example: Connection of 2 x 2 proximity sensors with tracks A, B

Two proximity sensors with phase-shifted signals for direction detection

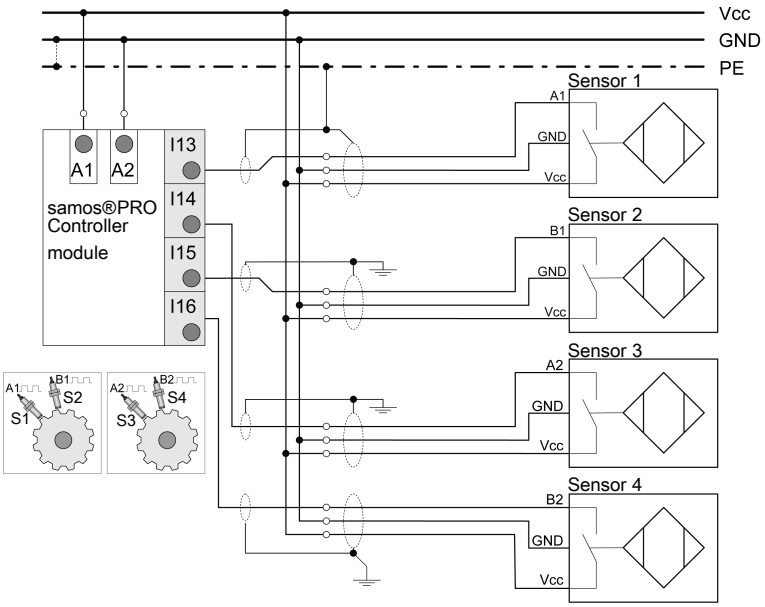

Fig. 37: Two sets of two proximity sensors for monitoring two axes

4.5.1.3.4 Connection of HTL encoders

HTL encoders with PNP outputs can be connected to the controller modules. HTL encoders are also known as push-pull encoders.

A list of typical signal lines appears in the section "*Number of signal lines [ch. 4.5.1.2.1, p. 67]*".

4.5.1.3.4.1 Example: Connection of HTL encoders with tracks A, B

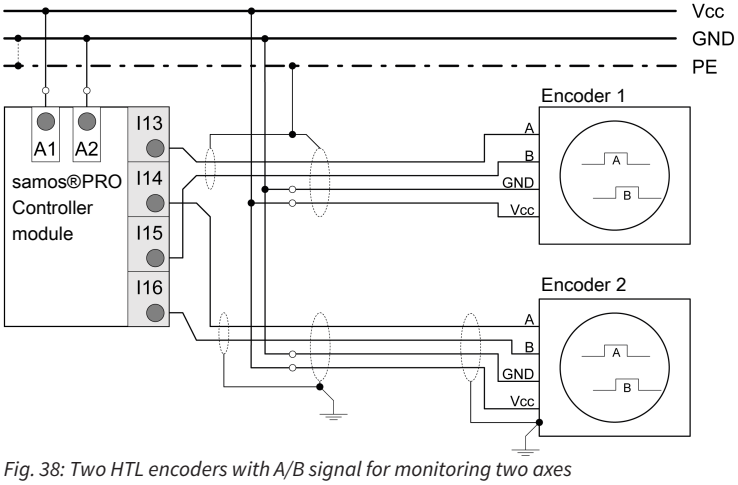

Fig. 38: Two HTL encoders with A/B signal for monitoring two axes

4.5.1.3.4.2 Example: Connection of an antivalent HTL encoder with tracks A, A/, B, B/

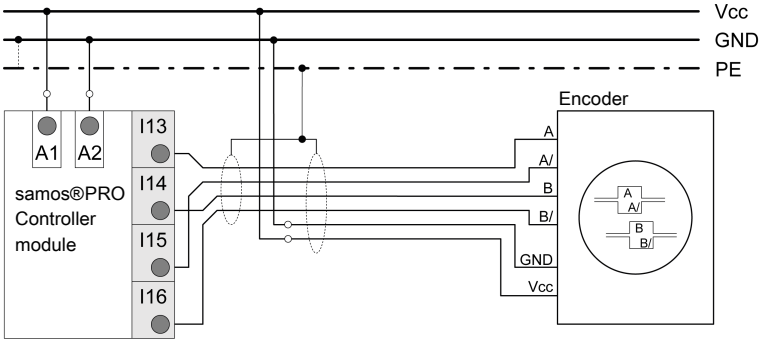

Fig. 39: One HTL encoder for monitoring one axis

4.5.1.3.5 Connection of SENC encoders

Note the following points when connecting SENC encoders:

- Fit the terminal strips directly to the left of SP-COPx-M.
- Use short, direct cable connections. Do not form any loops.
- Keep the braided screen as long as possible. Keep unscreened cables as short as possible.
- **Important:** 0 V must be grounded → PELV.
- Only connect SENC cables with wire end ferrules.
- Unused SENC outputs (e.g. A/, B/, Z, Z/) must be connected with a resistance of 3 kOhm to 0 V.

NOTICE

The following system limitation only applies if SENC incremental encoders are connected. The number of maximum permissible input/output/analog modules SP-DIO, SP-SDIO, SP-SDI, SP-SACR22, SP-SAC4, SP-SAR4 in the samos® PRO system is reduced to 10.

Only the connection of a SENC sensor to the SP-COP-M is shown below.

Marking of the resistance terminal (1…4):

- 1 = 0 V
- 2 = Resistance of 3 kOhm to 0 V
- 3 = Resistance of 3 kOhm to 0 V
- 4 = 0 V

4.5.1.3.5.1 Example: Connection of a SENC encoder with 2 tracks A, B

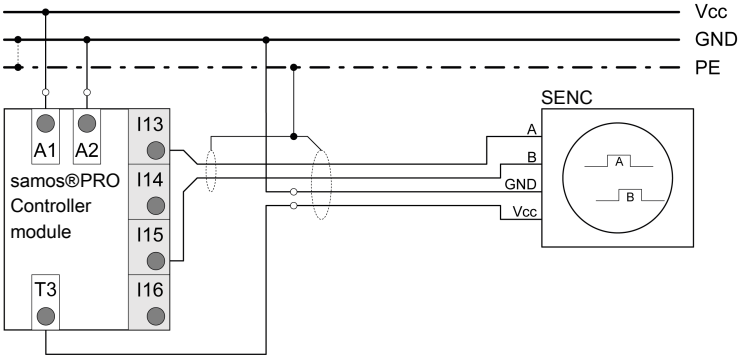

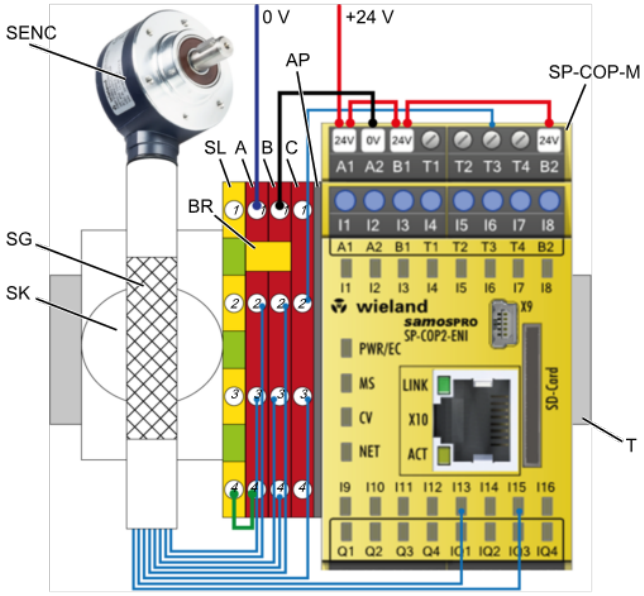

Tab. 46: Connection table

Source/signal	Source connection	Target component	Target connection
SENC +V	Blue	Terminal C	3
SENC +V	Green/brown	Terminal C	3
SENC 0 V	White	Terminal B	4
SENC 0 V	White/green	Terminal B	4
SENC A	Gray	SP-COP2-EN and SP-COP2-ENI-M	I13
SENC A/	Pink	Terminal A	2
SENC B	Brown	SP-COP2-EN and SP-COP2-ENI-M	I15
SENC B/	Green	Terminal A	3
SENC Z	Red	Terminal B	2
SENC Z/	Black	Terminal B	3
Terminal C	Connection 2	SP-COP2-EN and SP-COP2-ENI-M	T3
Protective conductor terminal	Connection 4	Terminal A	4
0V	–	Terminal A	1

Source/signal	Source connection	Target component	Target connection
Terminal B	Connection 1	SP-COP2-EN and SP-COP2-ENI-M	A2
+24V	–	SP-COP2-EN and SP-COP2-ENI-M	A1, B1, B2
SENC cable	Screen braid	Screen connection terminal	PE

Tab. 47: Bill of material for accessories

Target component	Article number	Product image
Terminal A: Resistance terminal	56.703.8455.5	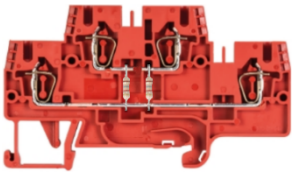
Terminal B: Resistance terminal	56.703.8455.5	
Terminal C: Level terminal	56.703.7555.5	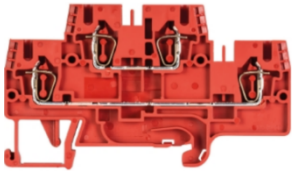
Protective conductor terminal	56.703.8955.0	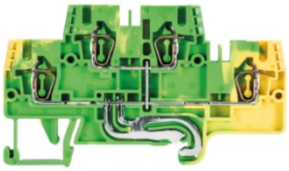
Bridge, 2-pin	Z7.280.6227.0	
Screen connection terminal	Z2.803.6110.0	
End plate	07.312.7355.0	

4.5.1.3.5.2 Example: Connection of two SENC encoders with 2 tracks A, B

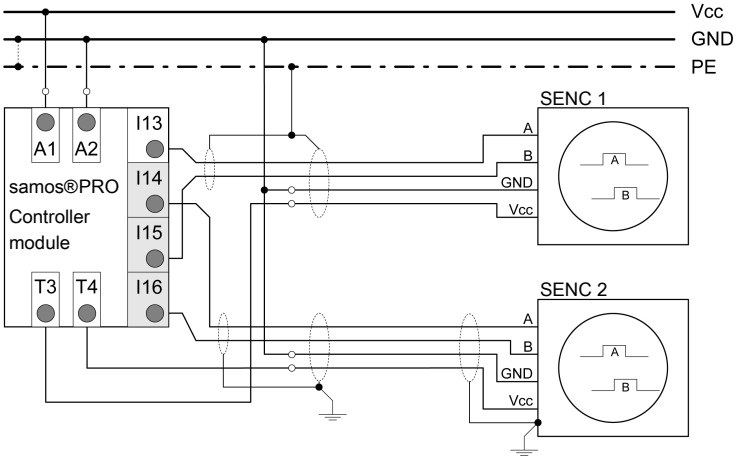

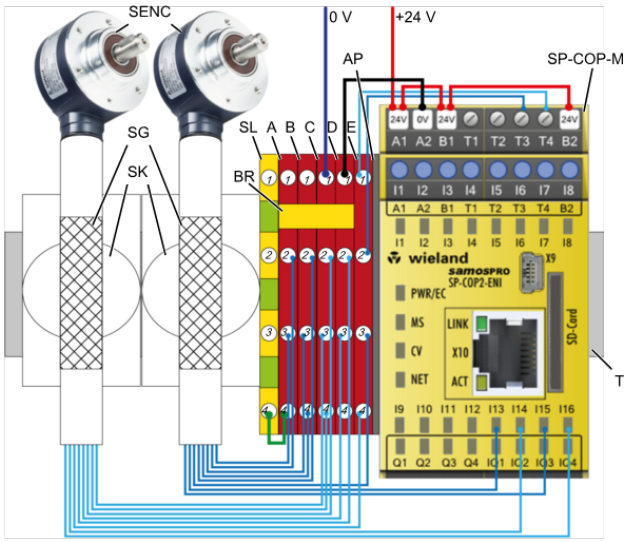

Tab. 48: Connection table

Source/signal	Source connection	Target component	Target connection
SENC1 +V	Blue	Terminal E	3
SENC1 +V	Green/brown	Terminal E	3
SENC1 0 V	White	Terminal B	4
SENC1 0 V	White/green	Terminal B	4
SENC1 A	Gray	SP-COP2-EN/SP-COP2-ENI-M	I13
SENC1 A/	Pink	Terminal A	2
SENC1 B	Brown	SP-COP2-EN/SP-COP2-ENI-M	I15
SENC1 B/	Green	Terminal A	3
SENC1 Z	Red	Terminal B	2
SENC1 Z/	Black	Terminal B	3
SENC2 +V	Blue	Terminal E	4
SENC2 +V	Green/brown	Terminal E	4

Source/signal	Source connection	Target component	Target connection
SENC2 0 V	White	Terminal C	4
SENC2 0 V	White/green	Terminal C	4
SENC2 A	Gray	SP-COP2-EN/SP-COP2-ENI-M	I14
SENC2 A/	Pink	Terminal C	2
SENC2 B	Brown	SP-COP2-EN/SP-COP2-ENI-M	I16
SENC2 B/	Green	Terminal C	3
SENC2 Z	Red	Terminal D	2
SENC2 Z/	Black	Terminal D	3
Terminal E	Connection 2	SP-COP2-EN/SP-COP2-ENI-M	T3
Terminal E	Connection 1	SP-COP2-EN/SP-COP2-ENI-M	T4
Protective conductor terminal	Connection 4	Terminal A	4
0V	–	Terminal C	1
Terminal D	Connection 1	SP-COP2-EN/SP-COP2-ENI-M	A2
+24V	–	SP-COP2-EN/SP-COP2-ENI-M	A1, B1, B2
SENC1 cable	Screen braid	Screen connection terminal	PE
SENC2 cable	Screen braid	Screen connection terminal	PE

Tab. 49: Bill of material for accessories

Target component	Article number	Product image
Terminal A: Resistance terminal	56.703.8455.5	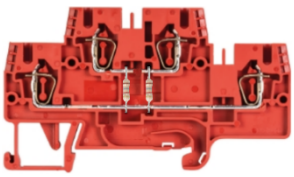
Terminal B: Resistance terminal	56.703.8455.5	
Terminal C: Resistance terminal	56.703.8455.5	
Terminal D: Resistance terminal	56.703.8455.5	
Terminal E: Level terminal	56.703.7555.5	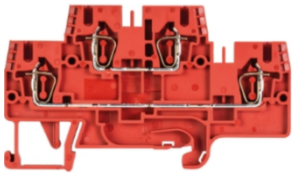
Protective conductor terminal	56.703.8955.0	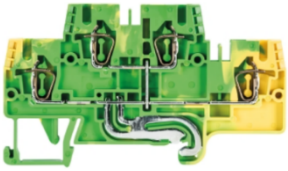

Target component	Article number	Product image
Bridge, 4-pin	Z7.280.6427.0	
Screen connection terminal	Z2.803.6110.0	
End plate	07.312.7355.0	

4.5.1.3.5.3 Example: Connection of a SENC encoder with 4 tracks A,A/,B,B/

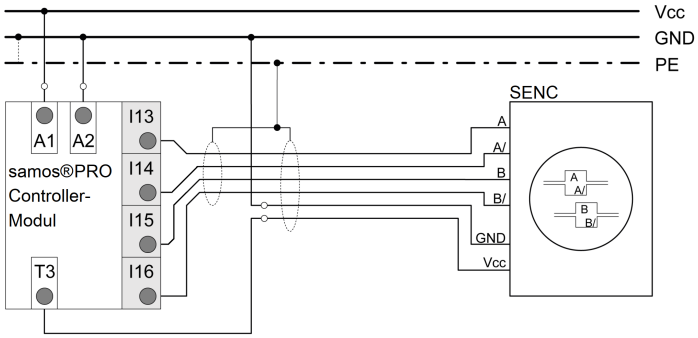

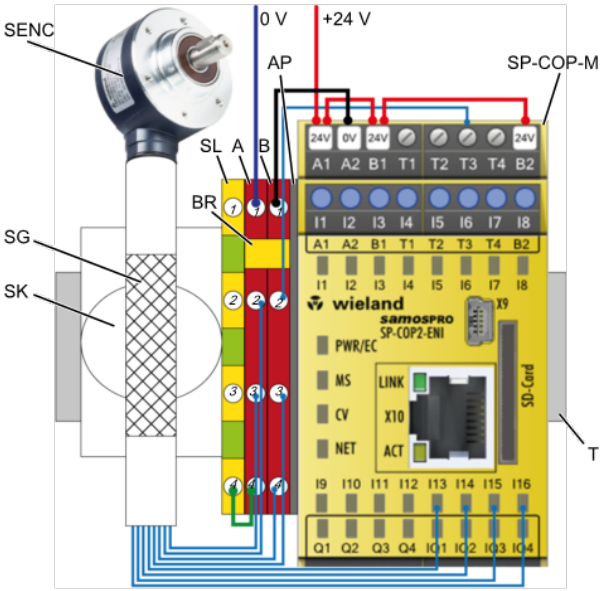

Tab. 50: Connection table

Source/signal	Source connection	Target component	Target connection
SENC +V	Blue	Terminal B	3
SENC +V	Green/brown	Terminal B	3
SENC 0 V	White	Terminal B	4

Source/signal	Source connection	Target component	Target connection
SENC 0 V	White/green	Terminal B	4
SENC A	Gray	SP-COP2-EN/SP-COP2-ENI-M	I13
SENC A/	Pink	SP-COP2-EN/SP-COP2-ENI-M	I14
SENC B	Brown	SP-COP2-EN/SP-COP2-ENI-M	I15
SENC B/	Green	SP-COP2-EN/SP-COP2-ENI-M	I16
SENC Z	Red	Terminal A	2
SENC Z/	Black	Terminal A	3
Terminal B	Connection 2	SP-COP2-EN/SP-COP2-ENI-M	T3
Protective conductor terminal	Connection 4	Terminal A	4
0V	–	Terminal A	1
Terminal B	Connection 1	SP-COP2-EN/SP-COP2-ENI-M	A2
+24V	–	SP-COP2-EN/SP-COP2-ENI-M	A1, B1, B2
SENC cable	Screen braid	Screen connection terminal	PE

Tab. 51: Bill of material for accessories

Target component	Article number	Product image
Terminal A: Resistance terminal	56.703.8455.5	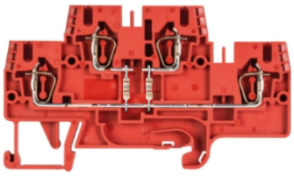
Terminal B: Level terminal	56.703.7555.5	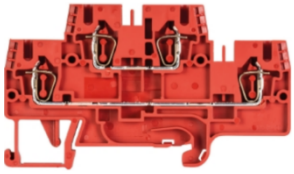
Protective conductor terminal	56.703.8955.0	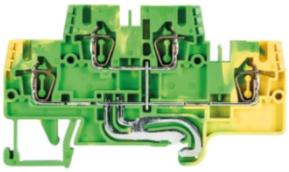
Bridge, 2-pin	Z7.280.6227.0	

Target component	Article number	Product image
Screen connection terminal	Z2.803.6110.0	
End plate	07.312.7355.0	

4.5.2 Sensors and attainable safety level

4.5.2.1 General information

The attainable safety level (PL or SIL) for the safety function depends on the following subsystems:

- Sensor
- Logic (samos® PRO)
- Actuators

In order to select suitable sensors, the properties of the actual sensors and the safety controller must be known and assessed at least.

Certain basic information is essential in selecting suitable motion monitoring sensors:

Which safety level should be attained?	During the risk analysis, hazards are identified and assessed, and measures for minimizing risks are defined. For technical control measures, an assessment of the machine structure, for example, is conducted according to EN 13849-1. The safety level specification, also called the Required Performance Level (PL_r), is determined with reference to the evaluation. In other applications, the target value for a Required Safety Integrity Level (SIL) can be defined.
Does the direction of rotation or travel have to be monitored?	For direction detection, 2 phase-shifted signals (A, B) are required. This can be achieved using 2 proximity sensors or an encoder with AB tracks.
Does the position have to be monitored?	Position detection requires 2-track sensors that can detect the direction of rotation. As a result, the position can be counted upward or downward following a reference run. For this, the signal for the reference input must meet at least the same safety requirements.
Vibration filter	For the A/B sensors with Rotational direction recognition, vibration problems can occur at standstill. For this issue the provided vibration filter offers different options. Consider the use of a vibration filter has an impact on the safety values.
Switching technology in the sensor	Sensors can have different output circuits (e.g. push-pull, open collector or special circuits specific to the manufacturer). The output type used has a direct influence on the possibilities of error detection (DC).
Architecture of the safety function	The categories (Cat.) outlined in EN 13849-1 describe the required performance of safety-related parts of a control when errors occur.

4.5.2.1.1 Determining the attainable safety level

The technical safety characteristics of the samos® PRO modules and all other devices used must be taken into consideration when calculating the maximum attainable safety level. We recommend using the SISTEMA tool to calculate the PL values of the safety function.

WARNING

The user or designer is responsible for the risk analysis and assessment as well as for designing the technical safety parts of the control correctly. This also includes calculating the Performance Level or SIL values for the selected safety functions.

You can always contact Wieland Electric to benefit from a professional risk analysis and risk assessment service.

Further information: *Safety technology reference values [ch. 12.4, p. 145]*

WARNING

The following safety reviews only take the **Sensor** and **Control logic** (samos® PRO MOTION) subsystems into consideration. The examples are only used for orientation purposes to identify suitable sensors and sensor combinations.

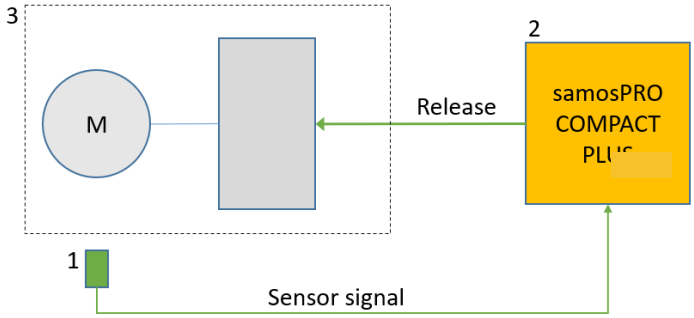

Fig. 40: Subsystems of a safety controller

[1]	Subsystem sensor
[2]	Subsystem logic (samos® PRO)
[3]	Subsystem actuator – not considered here!

You can find further information about the safety characteristics of the samos® PRO system here: *Safety technology reference values [ch. 12.4, p. 145]*

The values for the different sensor types as well as the planned functions can be found in the detailed descriptions of the sensors: *Sensors and attainable safety level [ch. 4.5.2, p. 83]*

General information

The following chapters only consider MTTFd and DC. Further requirements on the probability of failure from the standards must be observed.

Information on MTTF and $MTTF_D$

Only the manufacturer can provide the MTTF and $MTTF_D$ values for the sensors. Assuming that all errors are dangerous, MTTF = $MTTF_D$ can be set. The MTTF time can be found in the data sheet from the sensor manufacturer.

Information on PFH and PFHd

The PFH value of the sensor is the average probability of a failure per hour. The PFH value can be calculated from the MTTF and degree of diagnostic coverage (DC).

The degree of diagnostic coverage (DC) for the server is specified in the following chapters in combination with samos® PRO (logic).

If the dangerous failure rate is not known, the probability of a failure of the safety function per hour (PFHd) can be calculated as follows, assuming that all errors are dangerous: $PFH_d = (1 - DC) / MTTF_{sensor}$

Information on selecting sensors

If sensors with safety-related embedded software (SRESW) is used according to **EN ISO 13849**, their suitability must be ensured in order to attain the **safety characteristics specified in EN ISO 13849** as outlined in the following section.

The safety characteristics in EN 61508 specified in the following stipulate the use of sensors with a degree of suitability defined in DIN EN 61508. This applies to type B sensors, in particular.

Calculation example for the attainable safety level

The following data for the **Sensor** and samos® PRO subsystems is required to calculate the safety function

Safety characteristics according to EN ISO 13849

Safety function	With direction	Vibration filter	Requirements for each sensor		Max. achievable values (subsystem sensor)		
			Sensor output	$MTTF_D$	Category	DC subsystem sensor	PL
Speed	No	No	Open Collector	>30 years	1	60 %	C
Speed	No	With external drive stop	Open Collector	>30 years	1	60 %	B

Methodology example for sensor and actuator selection (MTTFd):

- ➡ Use Table K.1 in the EN ISO 13849-1 standard as a basis.
- ➡ Find the maximum allowable PFHd for the entire safety function by category, DC and PL in the table above.
- ➡ Total PFHd = PFHd (sensor) + PFHd (logic) + PFHd (actuator), where PFHd (logic) is known here (see *Safety technology reference values [ch. 12.4, p. 145]*).
- ➡ You can distribute the remaining PFHd equally between sensors and actuators:
  PFHd (sensor) = PFHd (actuator) = (PFHd (total) – PFHd (samos® PRO)) / 2
- ➡ Find the corresponding MTTFd in table K.1 and search for the appropriate sensor and actuator technology.
- ➡ Please pay attention to the DC and category for the subsystem actuator, which is not discussed in detail here.

Safety characteristics according to EN 61508

Safety function	With direction	Vibration filter	Requirements for each sensor		Max. achievable values (subsystem sensor)	
			Sensor output	SIL	HFT through the architecture of the sensors	SIL
Velocity, Position, Direction	Yes	No	Open Collector	1	1	SIL 2

Explanations for the example table

Safety function	The category of the motion monitoring safety function from chapter “Reference of the safety functions”. Possible function groups and functions are: • Velocity monitoring (with/without direction) – Standstill (Speed option) – SSR – SLS – SSM • Position monitoring (always with direction) – Standstill (with position) – SLP • Direction monitoring – SDI
With direction	The category answers the question whether the safety function uses the direction of rotation, regardless of whether the sensor has the direction of rotation information. To determine which function is configured with or without direction of rotation, see above.
Vibration filter	Vibration filters are used to deactivate special errors. This filter therefore reduces the DC value for the safety function. Possible values include: • No: The vibration filter is not configured • With external drive stop: The vibration filter is enabled with an external non-safe drive stop signal. • Permanent: permanently enabled
Sensor output	Electric interface of sensor output • Open Collector with Stuck-At-Low: Stuck-At-Low detection • Open Collector **Attention:** limited diagnostics! • Push Pull: Cable break detection
$MTTF_D$	$MTTF_D$ (Mean Time to Failure Dangerous) according to EN ISO 13849-1. Average time interval between dangerous errors. If the failure rate is not known, MTTF can be used for $MTTF_D$. $MTTF_D$ value from the Sensor subsystem should be considered together with other parameters in Appendix K of EN ISO 13849-1
Category	Category of the subsystem sensor according to EN 13849-1: 1
DC	Degree of diagnostic coverage of the sensor subsystem according to EN ISO 13849-1. Important: A diagnosis can only be performed in combination with samos® PRO (Logic). Possible values from EN ISO 13849-1 include: • None • Low • Medium • High
Max. attainable PL	Maximum attainable Performance Level according to EN 13849-1

Sensor type	Type of sensor according to EN 61508. Possible values include: • Type A • Type B In the event of uncertainties, users should always select type B.
HFT	Hardware failure tolerance according to EN 61508. The hardware failure tolerance describes the system architecture: • HFT = 0: the first failure can result in a loss of safety. (typically applies for single-channel structure) • HFT = 1: A single error does not yet lead to a loss of safety (typically applies for 2-channel structure)
Max. attainable SIL	Maximum attainable Safety Integrity Level according to IEC 61511

4.5.2.2 Proximity sensor A

• Available safety functions include:
  – Speed monitoring without direction (standstill, SLS, SSR, SSM)
• The proximity sensor must be suitable for use in industrial applications and meet the relevant standards.
The proximity sensor does not have to be a safe sensor, but must meet the requirements in this section.
• NO or NC, e.g. inductive standard proximity switch
• Electric version: PNP, 3-wire
  – L+: Power supply (e.g. 24V DC)
  – L-: Neutral
  – A: Sensor signal NO
• Mechanical system (e.g. toothed disc) compatible with sensor
• The sensor only generates one output signal A.
• Cable break detection possible on sensors with push-pull output.
• Stuck-at-low detection possible on sensors with open collector output.
	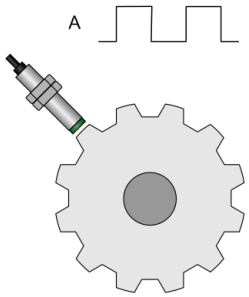

WARNING

Requirements for achieving the following parameters

The following characteristics require the exclusion of a fault in the mechanics according to EN 61800-5-2:2017 Table D.8.

4.5.2.2.1 Using a single channel sensor

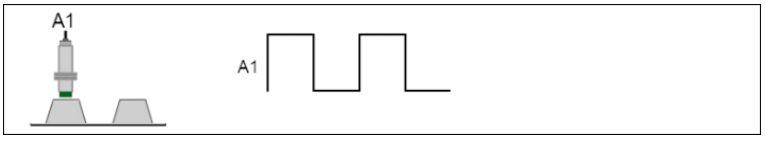

Diagnostic coverage

Due to the specifications for the "Category 1" architecture, no diagnostics are required according to EN ISO 13849.

NOTICE

To fulfill the safety principles, it is necessary to prevent or detect a short circuit or cable break by means of application measures.

Safety characteristics according to EN ISO 13849

Safety function	With direction	Vibration filter	Requirements for each sensor*		Max. achievable values (subsystem sensor)		
			Sensor output	$MTTF_d$	Category	DC subsystem sensor	PL
Speed	No	No	No influence	>100 years	1	None	c

* Tried and tested components must be used here. Please ask the sensor manufacturer whether the component has been tried and tested. If not, SIL 1 in accordance with EN 61058 will be achieved at maximum or only Cat B and PLb in accordance with EN 13849.

Example calculation:

Here category = 1, DC (subsystem sensor) = none, PL = c for the subsystem sensor. Since the logic (samos® PRO) has PL c, the total PL is determined by the weakest element.

The maximum PFHd (total) according to Table K.1 in EN ISO 13849-1_{2016-06} is $2.93 * 10^{-6}$.

PFHd of logic (samos® PRO) < $0.017 * 10^{-6}$ = rounded to $0.02 * 10^{-6}$

You can distribute the remaining PFHd equally between sensors and actuators:

Max (PFHd for sensors) = Max (PFHd for actuators) = $(2.93 * 10^{-6} - 0.02 * 10^{-6}) / 2 = 1.46 * 10^{-6}$

According to table K.1, the minimum $MTTF_d$ (sensor technology) = 82 years.

Summary: A sensor with am $MTTF_d$ of about 100 years (rounded up) or higher should be used. It is possible to adopt MTTF from the data sheet as $MTTF_d$, because this value is often not specified. In order for the overall safety function to reach a safety level of PL c, the actuator subsystem shall have at least PL c and the PFHd of the overall safety function shall meet the requirements.

Safety characteristics according to EN 61508

Safety function	With direction	Vibration filter	Requirements for each sensor		Max. achievable values (subsystem sensor)	
			Sensor output	SIL	HFT through the architecture of the sensors	SIL
Speed	No	No	No influence	1	0	1

4.5.2.2.2 Redundant use of two sensors

Important: Both encoders detect the same movement, and the phase angle can be set to any value. Both encoders are connected to the same functional component.

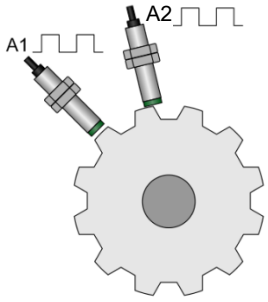

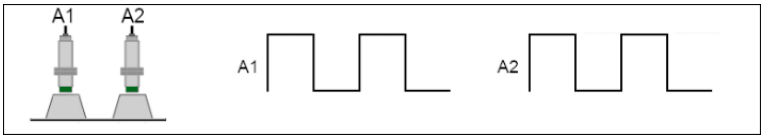

WARNING

Requirements for achieving the following parameters

Common cause failures (CCF) can lead to loss of safety. The use of diverse sensors is a measure to prevent CCF.

Short circuits in the power supply of one sensor must be prevented from affecting the second sensor. Measures must also be taken to prevent any interruption of the sensor power supply to the two sensors.

The following characteristic values apply on condition that a simultaneous disconnection of the two sensor lines or a cross-circuit between the sensor lines of A1 and A2 are excluded. This fault can be excluded by routing the cable appropriately according to DIN EN ISO 13849-2: 2012, table D.4.

Error detection

Type of error in a sensor circuit	Standard error detection
Line fault: Short circuit of any track to GND	Yes
Line fault: Short circuit of any track to 24 V	Yes
Line fault: Short circuit across all tracks to 24V	Yes
Line fault: Cable break on any track	Yes
Line fault: Cable break through all lines in the cable	Yes
Sensor error: Stuck-at of any output	Yes
Sensor error: Short circuit of outputs A and A/	-
Sensor error: Oscillation with incorrect frequency	Yes
Sensor error: No function	Yes

The described types of error are detected at the start of the movement at the latest. An accumulation of undetected errors at standstill can lead to loss of safety.

NOTICE

The diagnostic coverage (DC) can be further increased by additional measures in the application (e.g. comparison with target values or plausibility check using a motor signal). In the case of safety characteristics, the DC value can be degraded based on the standard and the category.

Safety characteristics according to EN ISO 13849

Safety function	With direction	Vibration filter	Requirements for each sensor		Max. achievable values (subsystem sensor)		
			Sensor output	$MTTF_d$	Category	DC subsystem sensor	PL
Speed	No	No	No influence	>200 years	3	Medium	e

Example calculation for $MTTF_d$ for each sensor:

Here, category = 3, DC (sub-system sensor) = medium, PL = e. Maximum of PFHd (total) according to table K.1 in EN ISO 13849-1_{2016-06} is $8.84 * 10^{-8}$.

The highest PFHd of logic (samos® PRO) < $0.017 * 10^{-6}$ = rounded up to $0.2 * 10^{-7}$

You can distribute the remaining PFHd equally between sensors and actuators:

Max (PFHd for sensors) = Max (PFHd for actuators) = $(8.84 * 10^{-8} - 1.7 * 10^{-8})/2 = 3.57 * 10^{-8}$

According to table K.1, the minimum PFHd (sensors) = 39 years.

Summary: A sensor with an $MTTF_d$ of about 200 years (rounded up) or higher should be used. In order for the overall safety function to reach a safety level of PL d, the actuator sub-system must be at least PL d, and the PFHd of the overall safety function must meet the requirements.

Safety characteristics according to EN 61508

Safety function	With direction	Vibration filter	Requirements for each sensor		Max. achievable values (sub-system sensor)	
			Sensor output	SIL	HFT through the architecture of the sensors	SIL
Speed	No	No	No influence	1	1	3

4.5.2.3 Proximity sensor A, A/

- Available safety functions include:
  - Speed monitoring without direction (standstill, SLS, SSR, SSM)
- The proximity sensor must be suitable for use in industrial applications and meet the relevant standards.
  The proximity sensor does not have to be a safe sensor, but must meet the requirements in this section.
- NO and NC, e.g. inductive standard proximity switch
- Electric version: PNP, 4-wire
  - L+: Power supply (e.g. 24 V DC)
  - L-: Neutral
  - A: Sensor signal NO
  - A/: Sensor signal NC
- Mechanical system (e.g. toothed disc) compatible with sensor.
- The sensor delivers two output signals A and A/.
- Rotational direction recognition is **not** possible.
- Cable break detection possible on sensors with push-pull output.
- Stuck-at-low detection possible on sensors with open collector output. Not possible for sensors with open collector without stuck-at-low detection.

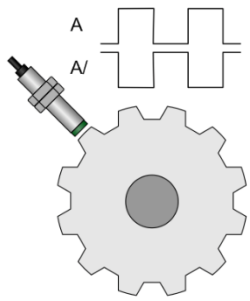

4.5.2.3.1 Using a sensor

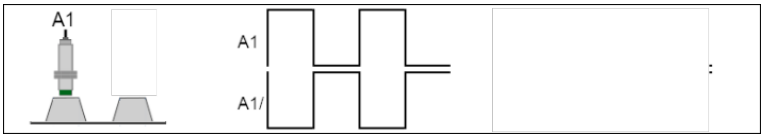

WARNING

Requirements for achieving the following parameters

The following characteristics require the exclusion of a fault in the mechanics according to EN 61800-5-2:2017 Table D.8.

The sensor must be a tried and tested component.

Line errors are detected.

Diagnostic coverage

Due to the specifications for the "Category 1" architecture, no diagnostics are required according to EN ISO 13849.

NOTICE

To fulfill the safety principles, it is necessary to prevent or detect a short circuit or cable break. This is ensured by the antivalent evaluation.

Safety characteristics according to EN ISO 13849

Safety function	With direction	Vibration filter	Requirements for each sensor*		Max. achievable values (subsystem sensor)		
			Sensor output	$MTTF_d$	Category	DC sub-system sensor	PL
Speed	No	No	No influence	100	1	–	c

Safety characteristics according to EN 61508

Safety function	With direction	Vibration filter	Requirements for each sensor		Max. achievable values (sub-system sensor)	
			Sensor output	SIL	HFT through the architecture of the sensors	SIL
Speed	No	No	No influence	1	0	1

* Proven components must be used here.

Example calculation for $MTTF_d$ for each sensor:

Here, category = 1, DC (sub-system sensor) = none, PL = c. Maximum of PFHd (total) according to table K.1 in EN ISO 13849-1_{2016-06} is 2.93 * 10^{-6}.

The highest PFHd of logic (samos® PRO) < 0.017 * 10^{-6} = rounded up to 0.02 * 10^{-6}

You can distribute the remaining PFHd equally between sensors and actuators:

Max (PFHd for sensors) = Max (PFHd for actuators) = (2.93 * 10^{-6} - 0.02 * 10-6)/2 = 1.46 * 10^{-6}

According to table K.1, the minimum $MTTF_d$ (sensor technology) = 82 years.

Summary: A sensor with an $MTTF_d$ of about 100 years (rounded up) or higher should be used. For the overall safety function to have a safety level of PL c, the actuator sub-system must also be at least PL c, and the PFHd of the overall safety function must meet the requirements.

4.5.2.3.2 Redundant use of two sensors

Important: The encoder signals detect the same movement and can take on any desired phase angle in relation to each other. Both encoders are connected to the same functional component.

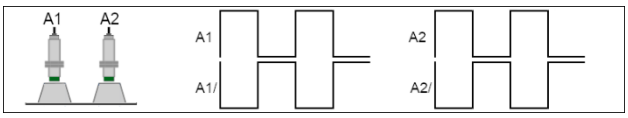

WARNING

Requirements for achieving the following parameters

Common cause failures (CCF) can lead to loss of safety. The use of diverse sensors is a measure to prevent CCF.

The outputs of the sensors used must be in the same output state when the sensor is de-energized. If the sensors do not have this characteristic, measures against CCF must be taken in the power supply of the sensors.

Error detection

Type of error in a sensor circuit	Standard error detection
Line fault: Short circuit of any track to GND	Yes
Line fault: Short circuit of any track to 24 V	Yes
Line fault: Short circuit across all lines in the cable	Yes
Line fault: Cable break on any track	Yes
Line fault: Cable break through all lines in the cable	Yes
Sensor error: Stuck-at of any output	Yes
Sensor error: Short circuit of outputs A and A/	Yes
Sensor error: Oscillation with incorrect frequency	Yes
Sensor error: No function (inside sensor)	Yes

The described types of error are detected at the start of the movement at the latest. An accumulation of undetected errors at standstill can lead to loss of safety.

NOTICE

The errors are detected at different times.

Further information: *Error detection times [ch. 12.2.3, p. 143]*

NOTICE

The diagnostic coverage (DC) can be further increased by additional measures in the application (e.g. comparison with target values or plausibility check using a motor signal). In the case of safety characteristics, the DC value can be degraded based on the standard and the category.

Safety characteristics according to EN ISO 13849

Safety function	With direction	Vibration filter	Requirements for each sensor		Max. achievable values (subsystem sensor)		
			Sensor output	$MTTF_d$	Category	DC subsystem sensor	PL
Speed	No	No	No influence	>200 years	3	Medium	e

Example calculation for $MTTF_d$ for each sensor:

Here, category = 3, DC (sub-system sensor) = medium, PL = e. Maximum of PFHd (total) according to table K.1 in EN ISO 13849-1_{2016-06} is $8.84 * 10^{-8}$.

The highest PFHd of logic (samos® PRO) < $0.017 * 10^{-6} = 1.7 * 10^{-8}$

You can distribute the remaining PFHd equally between sensors and actuators:

Max (PFHd for sensors) = Max (PFHd for actuators) = $(8.84 * 10^{-8} - 1.7 * 10^{-8})/2 = 3.57 * 10^{-8}$

According to table K.1, the minimum PFHd (sensors) = $4.29 * 10^{-8}$, which requires an $MTTF_d$ (sensors) = 100 years. It can be assumed that a double $MTTF_d$ is required here due to the smaller PFHd (sensors).

Summary: A sensor with an $MTTF_d$ of about 200 years (rounded up) or higher should be used. In order for the overall safety function to have a safety level of PL e, the actuator subsystem must also be at least PL e, and the PFHd of the overall safety function must meet the requirements.

Safety characteristics according to EN 61508

Safety function	With direction	Vibration filter	Requirements for each sensor		Max. achievable values (sub-system sensor)	
			Sensor output	SIL	HFT through the architecture of the sensors	SIL
Speed	No	No	No influence	1	1	3

4.5.2.4 2 proximity sensors A, B (sensor pair)

- Available safety functions include:
  - Standstill monitoring (standstill)
  - Speed monitoring with/without direction (SLS, SSR, SSM)
  - Safe direction (SDI)
  - Position monitoring (SLP)
- 2 proximity sensors
- The proximity sensor must be suitable for use in industrial applications and meet the relevant standards.
  The proximity sensor does not have to be a safe sensor, but must meet the requirements in this section.
- NO or NC, e.g. inductive standard proximity switch
- Electric version: PNP, 3-wire
  - L+: Power supply (e.g. 24V DC)
  - L-: Neutral
  - A: Sensor signal NO
- Mechanical system (e.g. toothed disc) compatible with sensor.
- Each sensor delivers an output signal A or B.
- Rotational direction recognition is possible by shifting the phase between A and B.
  Further information on phase shifting: Sensor requirements
- Cable break detection possible on sensors with push-pull output.
- Stuck-at-low detection possible on sensors with open collector output

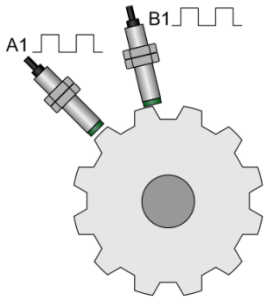

4.5.2.4.1 Using a sensor pair A, B

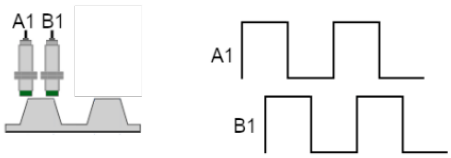

WARNING

Requirements for achieving the following parameters

The following characteristics require the exclusion of a fault in the mechanics according to EN 61800-5-2:2017 Table D.8.

Common cause failures (CCF) can lead to loss of safety. The use of diverse sensors is a measure to prevent CCF.

Short circuits in the power supply of one sensor must be prevented from affecting the second sensor. Measures must also be taken to prevent any interruption of the sensor power supply to the two sensors.

Recommendation: Protect the sensors individually and connect the GND lines of the sensors to the GND connection of the controller in a star point arrangement.

The following characteristic values apply on condition that a simultaneous disconnection of the two sensor lines or a cross-circuit between the sensor lines of A1 and B1 are excluded. This fault exclusion can be achieved if lines are laid appropriately according to EN ISO 13849-2:2012, table D.4.

Error detection

Type of error in a sensor circuit	Error detection with vibration filter		
	Without	With external drive stop	Permanent
Line fault: Short circuit of any track to GND	Yes	Yes	No
Line fault: Short circuit of any track to 24 V	Yes	Yes	No
Line fault: Short circuit across all lines in the cable	Yes	Yes	No
Line fault: Cable break on any track	Yes	Yes	No
Line fault: Cable break through all lines in the cable	Yes	Yes	No
Sensor error: Stuck-at of any output	Yes	Yes	No
Sensor error: Short circuit of outputs A and A/	Yes	Yes	No
Sensor error: Oscillation with incorrect frequency	Yes	Yes	No
Sensor error: No function (inside sensor)	Yes	Yes	No
Sensor error: Short circuit of 24V supply (inside sensor)	Yes	Yes	No

NOTICE

The errors are detected at different times.

Further information: *Error detection times [ch. 12.2.3, p. 143]*

NOTICE

The diagnostic coverage (DC) can be further increased by additional measures in the application (e.g. comparison with target values or plausibility check using a motor signal). In the case of safety characteristics, the DC value can be degraded based on the standard and the category.

Safety characteristics according to EN ISO 13849

Safety function	With direction	Vibration filter	Requirements for each sensor		Max. achievable values (subsystem sensor)		
			Sensor output	$MTTF_d$	Category	DC subsystem sensor	PL
All	Yes	No	No influence	>80 years	2	Medium	d

Safety function	With direction	Vibration filter	Requirements for each sensor		Max. achievable values (subsystem sensor)		
			Sensor output	$MTTF_d$	Category	DC sub-system sensor	PL
All	Yes	With external drive stop	No influence	>80 years	2	Medium	d
All	Yes	Permanent	No influence	>100 years	1	–	c

Example calculation for MTTFd (vibration filter = no):

Here, category = 2, DC (sub-system sensor) = medium, PL = d. Maximum of PFHd (total) according to table K.1 in EN ISO 13849-1_{2016-06} is $9.39 * 10^{-7}$.

The highest PFHd of logic (samos® PRO) < $0.17 * 10^{-7}$ = rounded up to $0.02 * 10^{-6}$

You can distribute the remaining PFHd equally between sensors and actuators:

Max (PFHd for sensors) = Max (PFHd for actuators) = $(9.39 * 10^{-7} - 0.17 * 10^{-7})/2 = 4.61 * 10^{-7}$

According to table K.1, the minimum $MTTF_d$ (sensor technology) = 62 years.

Summary: A sensor with an $MTTF_d$ of about 80 years (rounded up) or higher should be used. For the overall safety function to have a safety level of PL c, the actuator subsystem must also be at least PL c, and the PFHd of the overall safety function must meet the requirements.

Safety characteristics according to EN 61508

Safety function	With direction	Vibration filter	Requirements for each sensor		Max. achievable values (sub-system sensor)	
			Sensor output	SIL	HFT through the architecture of the sensors	SIL
All	Yes	No	No influence	1	0	2
All	Yes	With external drive stop	No influence	1	0	2
All	Yes	Permanent	No influence	1	0	1
Speed	No	No	No influence	1	1	3

4.5.2.4.2 Redundant use of two sensor pairs

Important: Both sensor pairs detect the same axis. The phase angle between the sensor pairs (A1, B1) and (A2, B2) can be set to any value.

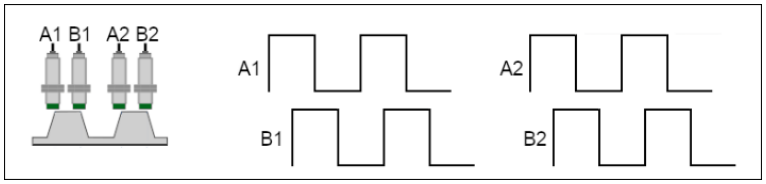

WARNING

Requirements for achieving the following parameters

The following characteristics require the exclusion of a fault in the mechanics according to EN 61800-5-2:2017 Table D.8.

Common cause failures (CCF) can lead to loss of safety. The use of diverse sensors is a measure to prevent CCF.

Short circuits in the power supply of one sensor must be prevented from affecting the other sensors. Measures must also be taken to prevent any interruption of the power supply from affecting all sensors.

Recommendation: Protect the sensors individually and connect the GND lines of the sensors to the GND connection of the control in a star point arrangement.

The following characteristic values apply on condition that a simultaneous disconnection of the four sensor lines or a cross-circuit between the sensor lines are excluded. This fault exclusion can be achieved if lines are laid appropriately according to EN ISO 13849-2:2012, table D.4.

Comparison of the sensor pairs A1/B1 and A2/B2 must be activated in the function block, so that the highest specified category can be achieved.

Error detection

Type of error in a sensor circuit	Error detection with vibration filter		
	Without	With external drive stop	Permanent
Line fault: Short circuit of any track to GND	Yes	Yes	Yes
Line fault: Short circuit of any track to 24V	Yes	Yes	Yes
Line fault: Short circuit across all lines in the cable	Yes	Yes	Yes
Line fault: Cable break on any track	Yes	Yes	Yes
Line fault: Cable break through all lines in the cable	Yes	Yes	Yes
Sensor error: Stuck-at of any output	Yes	Yes	Yes
Sensor error: Short circuit of outputs A and A/	Yes	Yes	Yes
Sensor error: Oscillation with incorrect frequency	Yes	Yes	Yes
Sensor error: No function (inside sensor)	Yes	Yes	Yes
Sensor error: Short circuit of 24V supply (inside sensor)	Yes	Yes	Yes

NOTICE

The diagnostic coverage (DC) can be further increased by additional measures in the application (e.g. comparison with target values or plausibility check using a motor signal). In the case of safety characteristics, the DC value can be degraded based on the standard and the category.

NOTICE

The errors are detected at different times.

Further information: *Error detection times [ch. 12.2.3, p. 143]*

Safety characteristics according to EN ISO 13849

Safety function	With direction	Vibration filter	Requirements for each sensor		Max. achievable values (subsystem sensor)		
			Sensor output	$MTTF_d$	Category	DC sub-system sensor	PL
All	Yes	No	No influence	>80 years	2	Medium	d
All	Yes	With external drive stop	No influence	>80 years	2	Medium	d
All	Yes	Permanent	No influence	>100 years	1	–	c

Example calculation for $MTTF_d$ (vibration filter = no):(vibration filter = no):

Here, category = 3, DC (sub-system sensor) = medium, PL = d. Maximum of PFHd (total) according to table K.1 in EN ISO 13849-1_{2016-06} is $947 * 10^{-7}$.

The highest PFHd of logic (samos® PRO) < $0.017 * 10^{-6} = 0.17 * 10^{-7}$

You can distribute the remaining PFHd equally between sensors and actuators:

Max (PFHd for sensor technology) = Max (PFHd for logic) = $(9.47 * 10^{-7} - 0.17 * 10^{-7}) / 2 = 4.65 * 10^{-7}$

According to table K.1, the minimum $MTTF_d$ (sensor technology) = 39 years.

Summary: A sensor with an $MTTF_d$ of about 50 years or higher should be used. For the overall safety function to have a safety level of PL d, the actuator subsystem must also be at least PL d, and the PFHd of the overall safety function must meet the requirements.

Safety characteristics according to EN 61508

Safety function	With direction	Vibration filter	Requirements for each sensor		Max. achievable values (sub-system sensor)	
			Sensor output	SIL	HFT through the architecture of the sensors	SIL
All	No influence	No	No influence	1	1	3
All	No influence	With external drive stop	No influence	1	1	3
All	No influence	Permanent	No influence	1	1	2

4.5.2.5 Proximity sensors A, A/, B, B/

- Available safety functions include:
  - Standstill monitoring (standstill)
  - Speed monitoring with/without direction (SLS, SSR, SSM)
  - Safe direction (SDI)
  - Position monitoring (SLP)
- 2 proximity sensors
- The proximity sensor must be suitable for use in industrial applications and meet the relevant standards.
- NO and NC, e.g. inductive standard proximity switch
- Electric version: PNP, 4-wire
  - L+: Power supply (e.g. 24V DC)
  - L-: Neutral
  - A: Sensor signal NO
  - A/: Sensor signal NC
- Mechanical system (e.g. toothed disc) compatible with sensor.
- Each sensor delivers two output signals A and A/ or B and B/.
- Rotational direction recognition is possible by shifting the phase between A and B.
- Cable break detection possible on sensors with push-pull output.
- Stuck-at-low detection possible on sensors with open collector output.

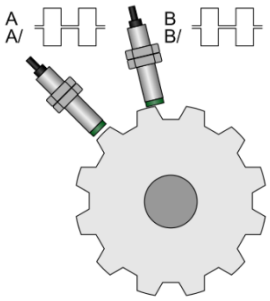

4.5.2.5.1 Using a sensor pair (A, A/), (B,B/)

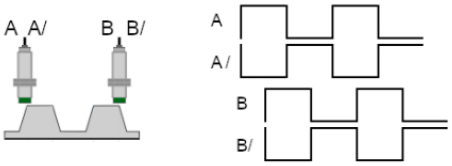

WARNING

Requirements for achieving the following parameters

The following characteristics require the exclusion of a fault in the mechanics according to EN 61800-5-2:2017 Table D.8.

Common cause failures (CCF) can lead to loss of safety. The use of diverse sensors is a measure to prevent CCF.

The outputs of the sensors used must be in the same output state when the sensor is de-energized. If the sensors do not have this characteristic, measures against CCF must be taken in the power supply of the sensors.

Error detection

Type of error in a sensor circuit	Error detection with vibration filter		
	Without	With external drive stop	Permanent
Line fault: Short circuit of any track to GND	Yes	Yes	Yes

Type of error in a sensor circuit	Error detection with vibration filter		
	Without	With external drive stop	Permanent
Line fault: Short circuit of any track to 24V	Yes	Yes	Yes
Line fault: Short circuit across all lines in the cable	Yes	Yes	Yes
Line fault: Cable break on any track	Yes	Yes	Yes
Line fault: Cable break through all lines in the cable	Yes	Yes	Yes
Sensor error: Stuck-at of any output	Yes	Yes	Yes
Sensor error: Short circuit of outputs A and A/	Yes	Yes	Yes
Sensor error: Oscillation with incorrect frequency	Yes	Yes	Yes
Sensor error: No function	Yes	Yes	No

NOTICE

The diagnostic coverage (DC) can be further increased by additional measures in the application (e.g. comparison with target values or plausibility check using a motor signal). In the case of safety characteristics, the DC value can be degraded based on the standard and the category.

NOTICE

The errors are detected at different times.

Further information: *Error detection times [ch. 12.2.3, p. 143]*

Safety characteristics according to EN ISO 13849

Safety function	With direction	Vibration filter	Requirements for each sensor		Max. achievable values (subsystem sensor)		
			Sensor output	$MTTF_d$	Category	DC subsystem sensor	PL
All	No influence	No	No influence	>50 years	3	Low	d
All	No influence	With external drive stop	No influence	>50 years	3	Low	d
All	No influence	Permanent	No influence	>100 years	1	None	c

Example calculation for $MTTF_d$ (vibration filter = no):

Here Category = 2, DC (subsystem sensor) = medium, PL = d. Maximum of PFHd (total) according to Table K.1 in EN ISO 13849-1_{2016-06} is $9.47 * 10^{-7}$.

The highest PFHd of logic (samos® PRO) < $0.017 * 10^{-6} = 0.17 * 10^{-7}$

You can distribute the remaining PFHd equally between sensors and actuators:

Max (PFHd for sensors) = Max (PFHd for actuators) = $(9.47 * 10^{-7} - 0.17 * 10^{-7})/2 = 4.65 * 10^{-7}$

According to table K.1, the minimum $MTTF_d$ (sensor technology) = 39 years.

Summary: A sensor with am $MTTF_d$ of about 50 years or higher should be used. For the overall safety function to have a safety level of PL d, the subsystem actuator must also have at least PL d and the PFHd of the overall safety function must meet the requirements.

Safety characteristics according to EN 61508

Safety function	With direction	Vibration filter	Requirements for each sensor		Max. achievable values (sub-system sensor)	
			Sensor output	SIL	HFT through the architecture of the sensors	SIL
All	No influence	No	No influence	1	0	2
All	No influence	With external drive stop	No influence	1	0	2
All	No influence	Permanent	No influence	1	0	1

4.5.2.6 Standard HTL incremental encoder with 2 tracks A, B

- Available safety functions include:
  - Standstill monitoring (standstill)
  - Speed monitoring with/without direction (SLS, SSR, SSM)
  - Safe direction (SDI)
  - Position monitoring (SLP)
- Incremental encoder with 2 tracks
- Electric version: Push-pull, HTL
- Incremental encoder delivers two output signals A and B.
- Rotational direction recognition is possible by shifting the phase between A and B.
- Cable break detection possible on sensors with push-pull output.

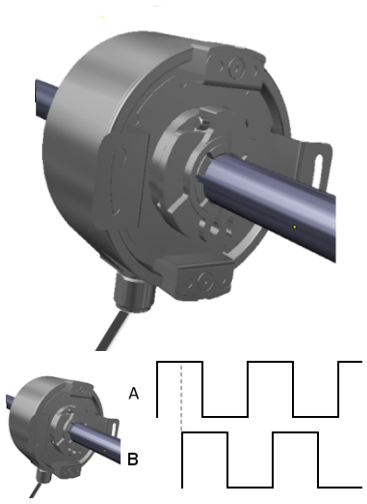

4.5.2.6.1 Using a standard HTL encoder (A,B)

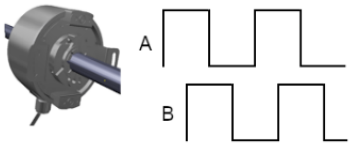

WARNING

Requirements for achieving the following parameters

The following characteristics require the exclusion of a fault in the mechanics according to EN 61800-5-2:2017 Table D.8.

Error detection

Type of error in a sensor circuit	Error detection with vibration filter		
	Without	With external drive stop	Permanent
Line fault: Short circuit of any track to GND	Yes	Yes	– (a)
Line fault: Short circuit of any track to 24V	Yes	Yes	– (a)

Type of error in a sensor circuit	Error detection with vibration filter		
	Without	With external drive stop	Permanent
Line fault: Short circuit between A and B	– (a)	– (a)	– (a)
Line fault: Short circuit across all lines in the cable	– (a)	– (a)	– (a)
Line fault: Cable break on any track	Yes	Yes	Yes
Line fault: Cable break through all lines in the cable	Yes	Yes	Yes
Sensor error: Stuck-at of any output	Yes	Yes	No
Sensor error: Short circuit of outputs A and A/	No	No	No
Sensor error: Oscillation with incorrect frequency	No	No	No
Sensor error: No function (inside sensor)	No	No	No
Sensor error: Short circuit of 24V supply (inside sensor)	No	No	No

(a): Fault exclusion: short circuit between any two conductors according to EN ISO 13849-2, Table D.4, protected installation

NOTICE

The diagnostic coverage (DC) can be further increased by additional measures in the application (e.g. comparison with target values or plausibility check using a motor signal). According to EN ISO 13849, no diagnosis is required due to the specifications for the "Category 1" architecture, but these specifications can provide support in case of these additional measures.

NOTICE

The errors are detected at different times.

Further information: *Error detection times [ch. 12.2.3, p. 143]*

Safety characteristics according to EN ISO 13849

Safety function	With direction	Vibration filter	Requirements for each sensor		Max. achievable values (subsystem sensor)		
			Sensor output	$MTTF_d$	Category	DC subsystem sensor	PL
All	No influence	No	Push-pull	>100 years	1	–	c
All	No influence	With external drive stop	Push-pull	>100 years	1	–	c
All	No influence	Permanent	Push-pull	>30 years	1	–	c
Classification into category 1 assumes that the sensor is a tried and tested component.							

Example calculation for $MTTF_d$ (vibration filter = No):

Here, category = 1, DC (sub-system sensor) = none, PL = c should be achieved for the sub-system sensor. Since the logic (samos® PRO) shows PL c, the total PL is determined by the weakest element.

The maximum PFHd (total) according to Table K.1 in EN ISO 13849-1_{2016-06} is $2.93 * 10^{-6}$. PFHd of logic (samos® PRO) < $0.017 * 10^{-6}$ = rounded to $0.02 * 10^{-6}$

You can distribute the remaining PFHd equally between sensors and actuators:

Max (PFHd for sensors) = Max (PFHd for actuators) = $(2.93 * 10^{-6} - 0.02 * 10^{-6})/2 = 1.46 * 10^{-6}$

According to table K.1, the minimum $MTTF_d$ (sensor technology) = 82 years.

Summary: A sensor with an $MTTF_d$ of about 100 years or higher should be used. For the overall safety function to have a safety level of PL c, the actuator subsystem must also be at least PL c, and the PFHd of the overall safety function must meet the requirements.

Safety characteristics according to EN 61508

Safety function	With direction	Vibration filter	Requirements for each sensor		Max. achievable values (sub-system sensor)	
			Sensor output	SIL	HFT through the architecture of the sensors	SIL
All	No influence	No	No influence	1	0	1
All	No influence	With external drive stop	No influence	1	0	1
All	No influence	Permanent	No influence	1	0	1

4.5.2.6.2 Redundant use of two standard HTL encoders (A,B)

Important: Both encoders record the same movement! To achieve the maximum safety characteristics, these encoders must use different methods (e.g. different speeds due to gear ratio or different manufacturers).

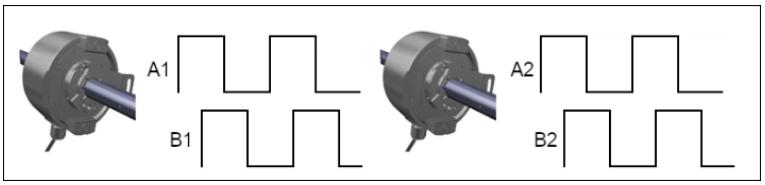

WARNING

Requirements for achieving the following parameters

Common cause failures (CCF) can lead to loss of safety. The use of various sensors or different speeds due to the transmission ratio are measures to prevent CCF.

Short circuits in the power supply of one sensor must be prevented from affecting the second sensor. Measures must also be taken to prevent any interruption in the power supply from affecting both sensors.

Recommendation: Safeguard the sensors individually and connect the GND lines of the sensors with the GND connection of the control in a star point arrangement so that either a single connection or the shared star point is interrupted when an error occurs.

Short circuits between the lines of sensor 1 and sensor 2 must be excluded. This fault exclusion can be achieved if lines are laid appropriately according to EN ISO 13849-2:2012, table D.4.

Comparison of the sensor pairs must be activated in the function block.

Error detection

Type of error in a sensor circuit	Error detection with vibration filter		
	Without	With external drive stop	Permanent
Line fault: Short circuit of any track to GND	Yes	Yes	Yes
Line fault: Short circuit of any track to 24V	Yes	Yes	Yes
Line fault: Short circuit between A and B	Yes	Yes	Yes
Line fault: Short circuit across all lines in the cable	Yes	Yes	Yes
Line fault: Cable break on any track	Yes	Yes	Yes

Type of error in a sensor circuit	Error detection with vibration filter		
	Without	With external drive stop	Permanent
Line fault: Cable break through all lines in the cable	Yes	Yes	Yes
Sensor error: Stuck-at of any output	Yes	Yes	Yes
Sensor error: Short circuit of outputs A and A/	Yes	Yes	Yes
Sensor error: Oscillation with incorrect frequency	Yes	Yes	Yes
Sensor error: No function (inside sensor)	Yes	Yes	Yes
Sensor error: Short circuit of 24V supply (inside sensor)	Yes	Yes	Yes

(a): Only if the comparison between the sensor pairs in the functional component is enabled.

NOTICE

The diagnostic coverage (DC) can be further increased by additional measures in the application (e.g. comparison with target values or plausibility check using a motor signal). In the case of safety characteristics, the DC value can be degraded based on the standard and the category.

NOTICE

The errors are detected at different times.

Further information: *Error detection times [ch. 12.2.3, p. 143]*

Safety characteristics according to EN ISO 13849

Safety function	With direction	Vibration filter	Requirements for each sensor		Max. achievable values (subsystem sensor)		
			Sensor output	$MTTF_d$	Category	DC subsystem sensor	PL
All	No influence	No	Push-pull	>30 years	3	Medium	d
All	No influence	With external drive stop	Push-pull	>30 years	3	Medium	d
All	No influence	Permanent	Push-pull	>50 years	3*	Low	d

* Only if the comparison between the sensor pairs in the functional component is enabled

Example calculation for $MTTF_d$ (vibration filter = no):

Here, category = 3, DC (sensor sub-system) = medium, PL = d. Maximum of PFHd (total) according to table K.1 in EN ISO 13849-1_{2016-06} is $9.21 * 10^{-7}$.

The highest PFHd of logic (samos® PRO) < $0.017 * 10^{-6}$ = rounded to $0.2 * 10^{-7}$

You can distribute the remaining PFHd equally between sensors and actuators:

Max (PFHd for sensors) = Max (PFHd for actuators) = $(9.21 * 10^{-7} - 0.2 * 10^{-7})/2 = 4.5 * 10^{-7}$

According to table K.1, the minimum $MTTF_d$ (sensor technology) = 22 years.

Summary: A sensor with an $MTTF_d$ of about 30 years or higher should be used. For the overall safety function to have a safety level of PL d, the actuator subsystem must also be at least PL d, and the PFHd of the overall safety function must meet the requirements.

Safety characteristics according to EN 61508

Safety function	With direction	Vibration filter	Requirements for each sensor		Max. achievable values (sub-system sensor)	
			Sensor output	SIL	HFT through the architecture of the sensors	SIL
All	No influence	No	No influence	1	1	2
All	No influence	With external drive stop	No influence	1	1	2
All	No influence	Permanent	No influence	1	1	2*

* Only if the comparison between the sensor pairs in the functional component is enabled

4.5.2.7 Standard HTL incremental encoder with 4 tracks A, A/, B, B/

- Available safety functions include:
  - Standstill monitoring (standstill)
  - Speed monitoring with/without direction (SLS, SSR, SSM)
  - Safe direction (SDI)
  - Position monitoring (SLP)
- Incremental encoders with 2 tracks and antivalent signals
- Example: Wieland SENC-58S10HTL0360A with 360 impulses per revolution
- Electric version: Push-pull, HTL
- Incremental encoder delivers two output signals A and B as well as two antivalent signals A/ and B/.
- Rotational direction recognition is possible by shifting the phase between A and B.
- Cable break detection possible on sensors with push-pull output.

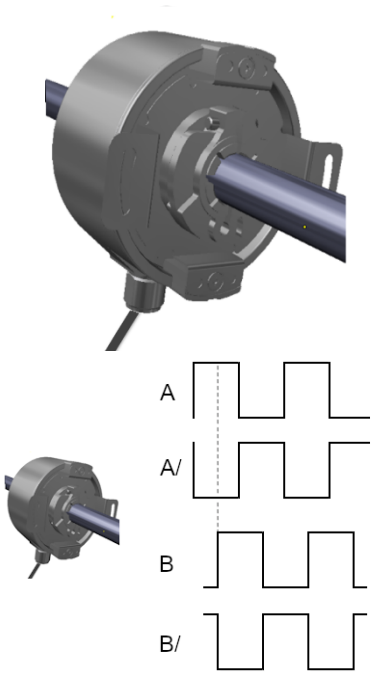

4.5.2.7.1 Using a standard HTL encoder

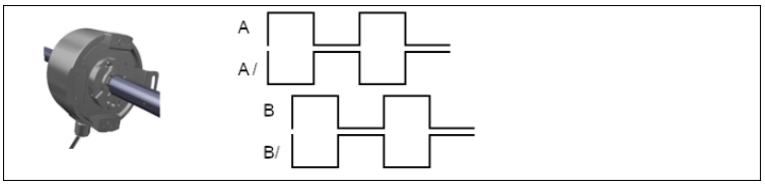

WARNING

Requirements for achieving the following parameters

The following characteristics require the exclusion of a fault in the mechanics according to EN 61800-5-2:2017 Table D.8.

Error detection

Type of error in a sensor circuit	Error detection with vibration filter		
	Without	With external drive stop	Permanent
Line fault: Short circuit of any track to GND	Yes	Yes	– (a)
Line fault: Short circuit of any track to 24V	Yes	Yes	– (a)
Line fault: Short circuit between A and B	– (a)	– (a)	– (a)
Line fault: Short circuit across all lines in the cable	– (a)	– (a)	– (a)
Line fault: Cable break on any track	Yes	Yes	Yes
Line fault: Cable break through all lines in the cable	Yes	Yes	Yes
Sensor error: Stuck-at of any output	Yes	Yes	No
Sensor error: Short circuit of outputs A and A/	No	No	No
Sensor error: Oscillation with incorrect frequency	No	No	No
Sensor error: No function (inside sensor)	No	No	No
Sensor error: Short circuit of 24V supply (inside sensor)	No	No	No

(a): Fault exclusion: short circuit between any two conductors according to EN ISO 13849-2, Table D.4, protected installation

NOTICE

The diagnostic coverage (DC) can be further increased by additional measures in the application (e.g. comparison with target values or plausibility check using a motor signal). According to EN ISO 13849, no diagnosis is required due to the specifications for the "Category 1" architecture, but these specifications can provide support in case of these additional measures.

NOTICE

The errors are detected at different times.

Further information: *Error detection times [ch. 12.2.3, p. 143]*

Safety characteristics according to EN ISO 13849

Safety function	With direction	Vibration filter	Requirements for each sensor		Max. achievable values (subsystem sensor)		
			Sensor output	$MTTF_d$	Category	DC sub-system sensor	PL
All	No influence	No	Push-pull	>100 years	1	-	c
All	No influence	With external drive stop	Push-pull	>100 years	1	-	c
All	No influence	Permanent	Push-pull	>100 years	1	-	c

Classification into category 1 assumes that the sensor is a tried and tested component.

Example calculation for $MTTF_d$ (vibration filter = no):

Here, category = 1, DC (sub-system sensor) = none, PL = c. Maximum of PFHd (total) according to table K.1 in EN ISO 13849-1_{2016-06} is $2.93 * 10^{-6}$.

The highest PFHd of logic (samos® PRO) < $0.017 * 10^{-6}$ = rounded up to $0.02 * 10^{-6}$

You can distribute the remaining PFHd equally between sensors and actuators:

Max (PFHd for sensors) = Max (PFHd for actuators) = $(2.93 * 10^{-6} - 0.02 * 10^{-6})/2 = 1.46 * 10^{-6}$

According to table K.1, the minimum $MTTF_d$ (sensor technology) = 82 years.

Safety characteristics according to EN 61508

Safety function	With direction	Vibration filter	Requirements for each sensor		Max. achievable values (sub-system sensor)	
			Sensor output	SIL	HFT through the architecture of the sensors	SIL
All	No influence	No	Push-pull	1	0	1
All	No influence	With external drive stop	Push-pull	1	0	1
All	No influence	Permanent	Push-pull	1	0	1

Summary: A sensor with an $MTTF_d$ of about 100 years or higher should be used. For the overall safety function to have a safety level of PL c, the actuator subsystem must also be at least PL c, and the PFHd of the overall safety function must meet the requirements.

4.5.2.8 Safe SENC HTL encoder with 2 tracks A ,B

- Available safety functions include:
  - Standstill monitoring (standstill)
  - Speed monitoring with/without direction (SLS, SSR, SSM)
  - Safe direction (SDI)
  - Position monitoring (SLP)
- Incremental encoder with 2 tracks
- Electric version: Push-pull, HTL
- Incremental encoder delivers two output signals A and B.
- Rotational direction recognition is possible by shifting the phase between A and B.
- Cable break detection possible on sensors with push-pull output.

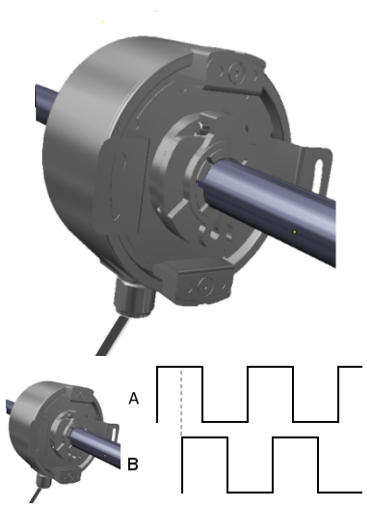

4.5.2.8.1 Using a SENC encoder (A,B)

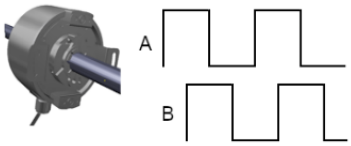

This chapter deals exclusively with the safe encoders of the SENC series from Wieland Electric.

The samos® PRO safety characteristics of the application have been checked for plausibility by the TÜV.

NOTICE

The following characteristic values apply on the condition that a fault exclusion "short circuit in the cable" can be performed in accordance with EN ISO 13849-2: 2012, Table D.4.

Observe the notes on connecting a SENC encoder, see "Connection of SENC encoders".

Safety characteristics according to EN ISO 13849

Safety function	With direction	Vibration filter	Requirements for each sensor		Max. achievable values (subsystem sensor)		
			Sensor output	$MTTF_d$	Category	DC subsystem sensor	PL
All	No influence	No	Push-pull	1050	3	Medium	e
All	No influence	With external drive stop	Push-pull	1050	3	Low	d
All	No influence	Permanent	Push-pull	1050	2	Low	d

Safety characteristics according to EN 61508

Safety function	With direction	Vibration filter	Requirements for each sensor		Max. achievable values (subsystem sensor)	
			Sensor output	SIL	HFT through the architecture of the sensors	SIL
All	No influence	No	Push-pull	3	0	3
All	No influence	With external drive stop	Push-pull	3	0	2
All	No influence	Permanent	Push-pull	3	0	2

Summary: These specifications apply to the subsystem sensor if only the SENC encoders for sensor technology and samos® PRO for logic are used. In order for the overall safety function to have a safety level of PL d, for example, the subsystem actuator must also have at least PL d and the PFHd of the overall safety function must meet the requirements.

4.5.2.8.2 Redundant use of two SENC encoders (A,B)

Important: Both encoders record the same movement! To achieve the maximum safety characteristics, these encoders must use different methods (e.g. different speeds due to gear ratio or different manufacturers).

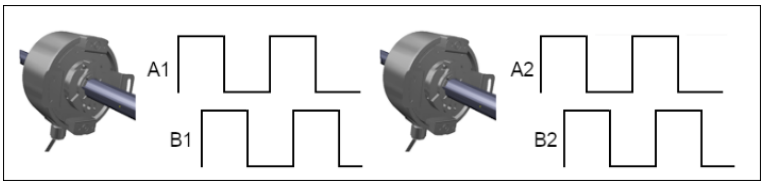

This chapter deals exclusively with the safe encoders of the SENC series from Wieland Electric.

The samos® PRO safety characteristics of the application have been checked for plausibility by the TÜV.

NOTICE

The following characteristic values apply on the condition that the two sensor cables are laid separately from one another to exclude a simultaneous short circuit in the cable.

Observe the notes on connecting a SENC encoder, see "Connection of SENC encoders".

Safety characteristics according to EN ISO 13849

Safety function	With direction	Vibration filter	Requirements for each sensor		Max. achievable values (subsystem sensor)		
			Sensor output	$MTTF_d$	Category	DC subsystem sensor	PL
All	No influence	No	Push-pull	1050	3 *	Medium	e
All	No influence	With external drive stop	Push-pull	1050	3 *	Medium	e
All	No influence	Permanent	Push-pull	1050	3 *	Low	d

* Only if the comparison between the two sensor pairs in the functional component is enabled

Safety characteristics according to EN 61508

Safety function	With direction	Vibration filter	Requirements for each sensor		Max. achievable values (subsystem sensor)	
			Sensor output	SIL	HFT through the architecture of the sensors	SIL
All	No influence	No	Push-pull	3	1	3
All	No influence	With external drive stop	Push-pull	3	1	3 *
All	No influence	Permanent	Push-pull	3	1	2 *

* Only if the comparison between the sensor pairs in the functional component is enabled

Summary: These specifications apply to the subsystem sensor if only the SENC encoders for sensor technology and samos® PRO for logic are used. For the overall safety function to have a safety level of PL e, the subsystem actuator must also have at least PL e and the PFHd of the overall safety function must meet the requirements.

4.5.2.9 Safe SENC HTL encoder with antivalent signals A, A/, B, B/

- Available safety functions include:
  - Standstill monitoring (standstill)
  - Speed monitoring with/without direction (SLS, SSR, SSM)
  - Safe direction (SDI)
  - Position monitoring (SLP)
- Incremental encoders with 2 tracks and antivalent signals
- Example: Wieland SENC-58S10HTL0360A with 360 impulses per revolution
- Electric version: Push-pull, HTL
- Incremental encoder delivers two output signals A and B as well as two antivalent signals A/ and B/.
- Rotational direction recognition is possible by shifting the phase between A and B.
- Cable break detection possible on sensors with push-pull output.

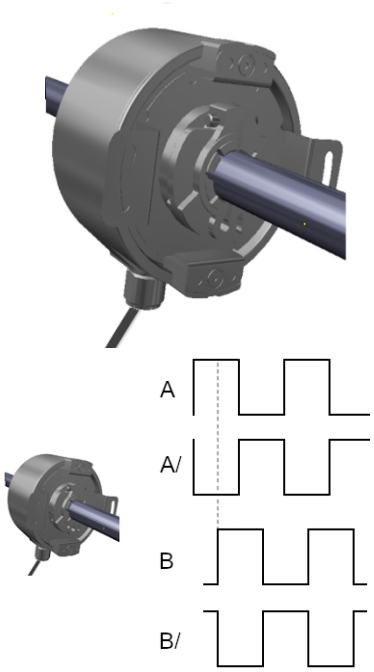

4.5.2.9.1 Using a SENC encoder (A,A/,B,B/)

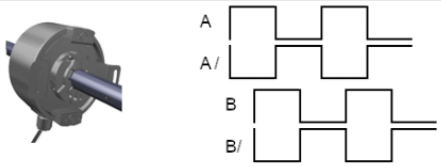

This chapter deals exclusively with the safe encoders of the SENC series from Wieland Electric.

The samos® PRO safety characteristics of the application have been checked for plausibility by the TÜV.

Safety characteristics according to EN ISO 13849

Safety function	With direction	Vibration filter	Requirements for each sensor		Max. achievable values (subsystem sensor)		
			Sensor output	$MTTF_d$	Category	DC subsystem sensor	PL
All	No influence	No	Push-pull	1050	4	High	e
All	No influence	With external drive stop	Push-pull	1050	4	High	e
All	No influence	Permanent	Push-pull	1050	3	Low	d

Safety characteristics according to EN 61508

Safety function	With direction	Vibration filter	Requirements for each sensor		Max. achievable values (subsystem sensor)	
			Sensor output	SIL	HFT through the architecture of the sensors	SIL
All	No influence	No	Push-pull	3	0	3
All	No influence	With external drive stop	Push-pull	3	0	3
All	No influence	Permanent	Push-pull	3	0	2

Summary: These specifications apply to the subsystem sensor if only the SENC encoders for sensor technology and samos® PRO for logic are used. For the overall safety function to have a safety level of PL e, the subsystem actuator must also have at least PL e and the PFHd of the overall safety function must meet the requirements.

4.6 Analog sensors

You can use two different analog sensors.

Electrical connection: Example from samos® PLAN 6	
	Current sensor
	Temperature sensor

4.6.1 Connection and wiring

4.6.1.1 Current sensor

Connection of a 2-wire current sensor (type 2)

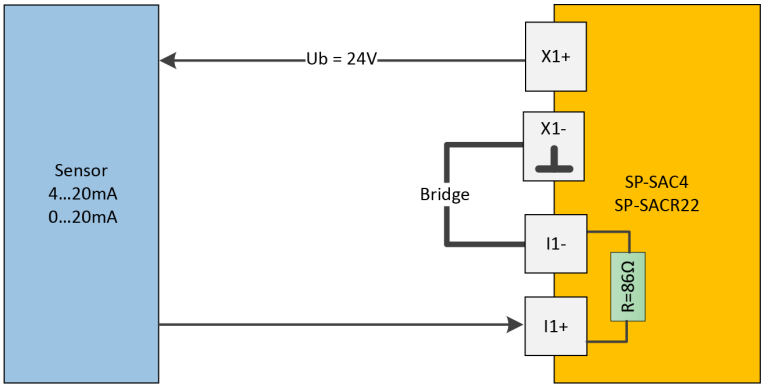

Connection of a 2-wire current sensor to two inputs (type 2)

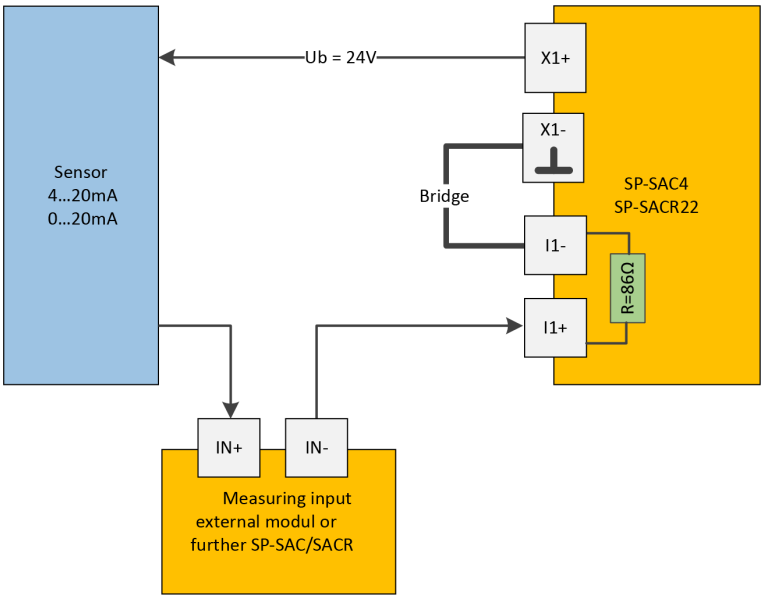

Connection of a 3-wire sensor (type 3)

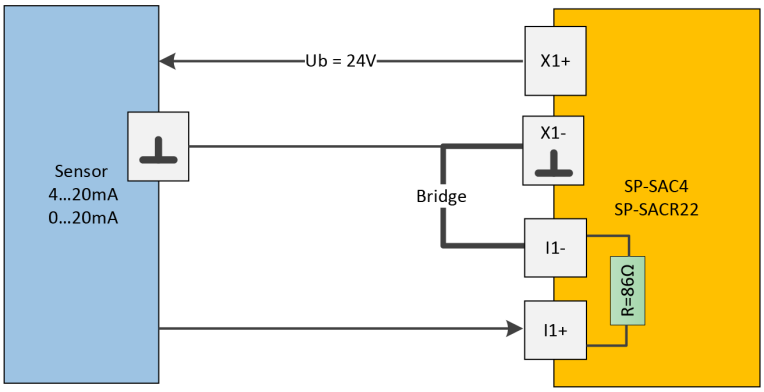

Connection of a 4-wire sensor (type 4)

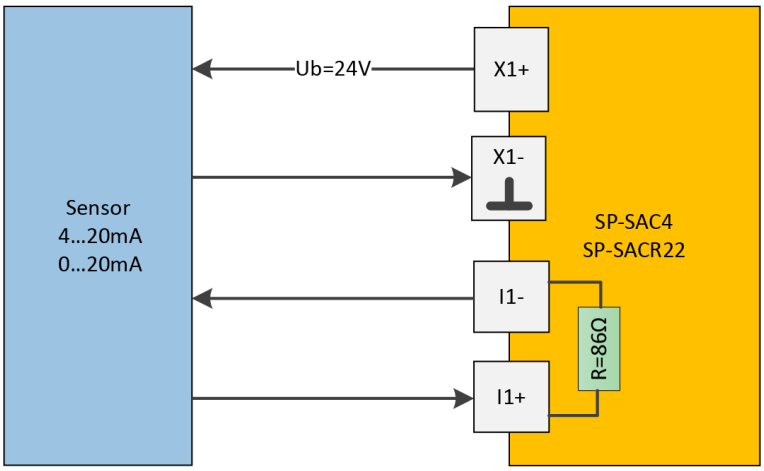

Connection of an active 2-wire sensor/process calibrator

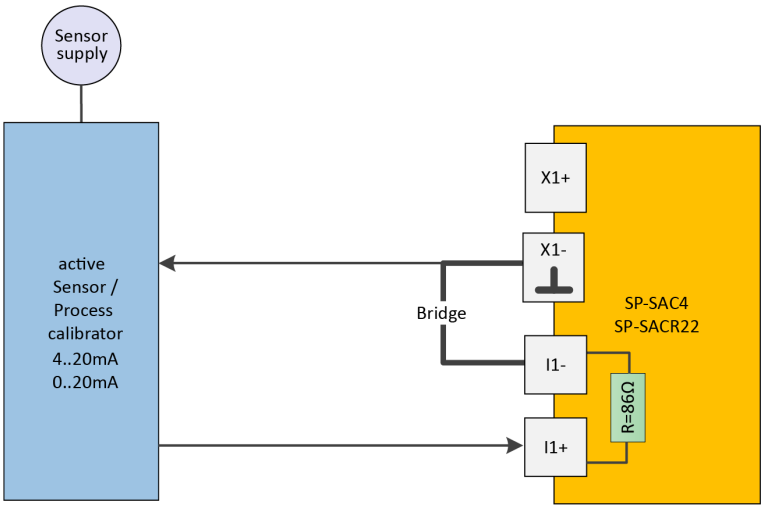

Fig. 41:

Connection of a current sensor to multiple inputs

If several inputs are looped through, the corresponding load resistances are added up. Usually, the following relation applies for the maximum load resistance:

$$R_L \leq \frac{(U_{SensorSupplyX} - U_{MinSensorVoltage})}{0{,}02A}$$

$U_{SensorSupplyX}$: *24 V supply voltage at X1, X2, X3, X4*

$U_{MinSensorVoltage}$: *minimum operating voltage of sensor*

Consequently, only a certain number of inputs can be connected to one another in series, depending on the sensor type.

NOTICE

If a sensor is connected to several looped current inputs, it should be ensured that the galvanic isolation is maintained, i.e. only the input on the last device in the chain can be connected to the sensor ground (see *Connection of a 2-wire current sensor (type 2) [ch. 4.6.1.1, p. 111]*).

Screening a current sensor

Screened sensors are recommended due to their immunity to interference. The sensors are connected via a screened connecting terminal.

4.6.1.2 Temperature sensor

Connection of a temperature sensor (RTD) in 2-wire technology

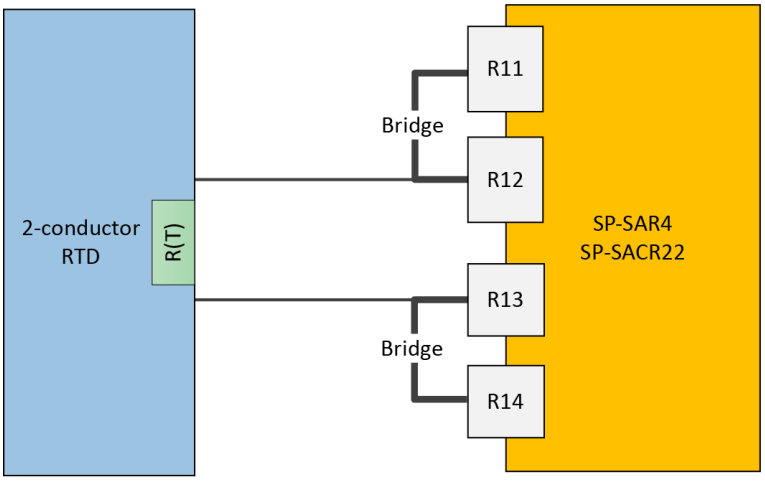

Connection of a temperature sensor (RTD) in 3-wire technology

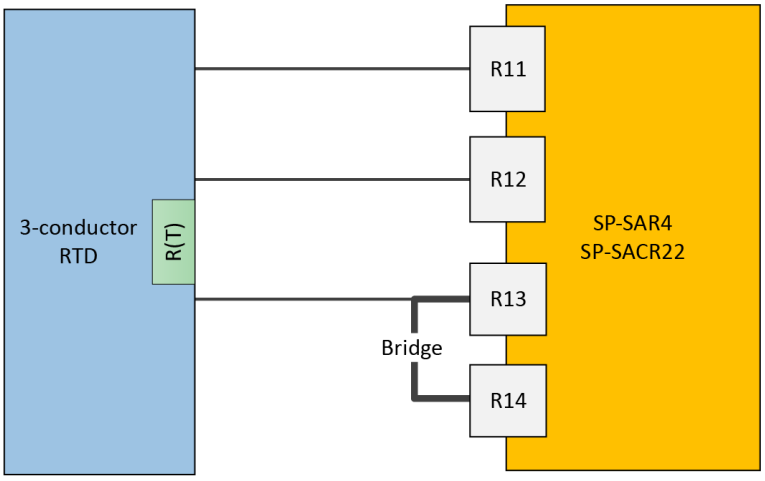

Connection of a temperature sensor (RTD) in 4-wire technology

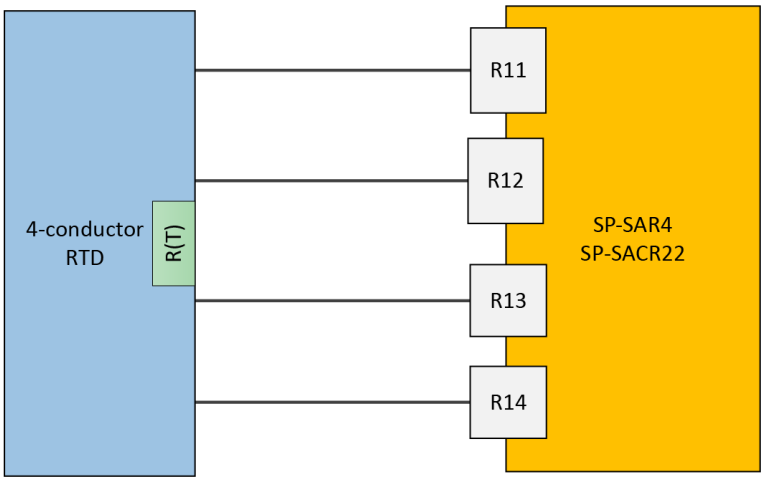

4.7 Safety outputs

WARNING

Safety-based devices must be suitable for safety-relevant signals!

An interruption in the function of safety outputs will lead to a loss of safety functions, which means that there will be a risk of severe injury.

- Do not connect any loads that exceed the rated values of the safety outputs.
- Wire the samos® PRO system such that no 24 V DC signals can unintentionally make contact with the safety outputs.
- Connect the GND lines of the power supply to ground so that the devices do not switch on when the safety output line is at ground potential.
- Use suitable components or devices that fulfill the applicable guidelines and standards.
- Actuators can be wired at the output as single-channel. To ensure compliance with the appropriate safety integrity levels, the cables must be routed in such a way that cross-connections to other signals are excluded, e.g. by routing them within protected areas, e.g. control cabinets, or with separate, screened cables.

5 SPECIAL FUNCTIONS

5.1 Muting

Muting is the automatic temporary bypassing of all safety-based functions of the control system or of the safety equipment. Muting is used when certain objects, e.g. pallets with material, may be moved into the hazardous area. During this transport, the muting function suppresses monitoring by the contactless safety device (BWS), e.g. a safety light curtain.

For further information, observe the information in the software manual in the following chapter: Function blocks for parallel muting, sequential muting, and cross muting

6 INSTALLING/REMOVING

This section describes the installation of modules for the samos® PRO safety controller.

6.1 Installation position and maximum expansion stage

The following combination was defined and examined as the maximum expansion stage of the samos® PRO system. All inputs are wired with test pulses and the outputs are loaded with the corresponding currents after derating.

In order to guarantee fault-free operation, use of a 24 V supply voltage is preferred under extreme conditions.

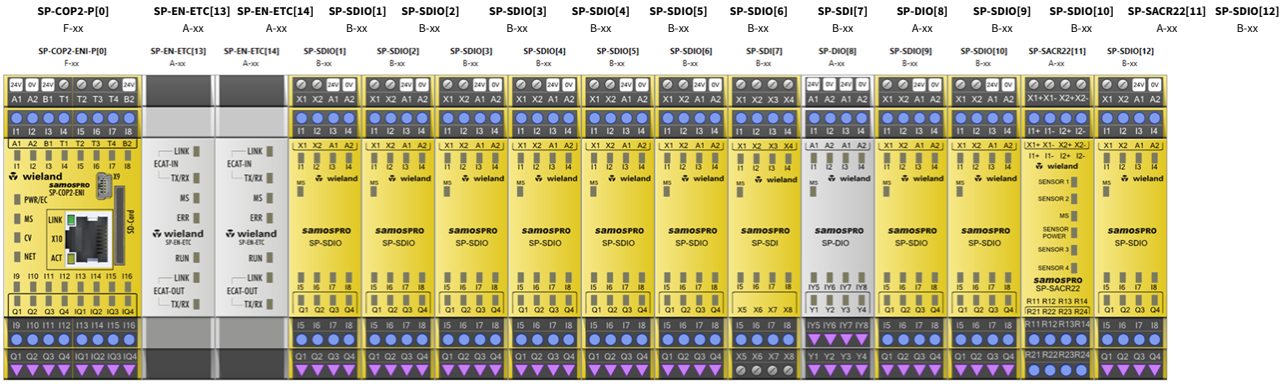

The system has not exhibited any restrictive behavior when operated in the normal installation position (DIN rail mounted horizontally on the wall).

If the system is operated in a different installation position, an ambient temperature of 55 °C should not be exceeded in order to guarantee continuous operation.

The following installation positions are permitted:

standard	upright	horizontal	overhead
		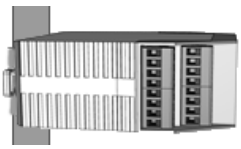	

6.2 Installing modules on DIN rails

WARNING

Only for control cabinets with protection class IP 54 or higher!

The samos® PRO system is only suitable for installations in a switchbox having at least protection class IP 54.

Notes

- Basic safety:
  Gateways and extended modules may not be removed or added when the operating voltage is switched on.

- Grounding:
  The DIN rail must be conductively connected to the protective earth conductor (PE).
- ESD protection measures:
  Observe suitable ESD protection measures during installation.
  Failure to do so could result in damage to the modules.
- Protect connector openings:
  Undertake suitable measures so that no foreign bodies can penetrate connector openings, particularly those for the program removable storage.
- Module width:
  The modules are placed in a mounting box that is 22.5 mm or 45 mm wide depending on type.
- Quality of DIN rail:
  The mounting boxes are suitable for 35 mm DIN rails as per EN 60715.
- Sequence of modules:
  The samos® PRO system has the controller module on the far left. The two optional gateways follow directly to the right next to the controller module. The expansion modules only follow thereafter.
  As a general principle, we recommend that a distance of ≥ 15 mm is provided between the last system module and the adjacent modules on the right. This measure makes module replacement easier and prevents interference from possible malfunctions in the module extension connector.
- Standards to be taken into consideration:
  Installation according to EN 50274

Step 1: Installing a controller module

➡ Use a screwdriver to pull the mounting foot outward.

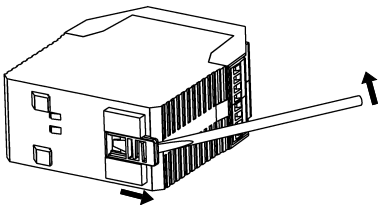

➡ Hang the module on the DIN rail.
Important! Make sure that the screening spring fits correctly.
The screening spring of the module must be placed onto the DIN Rail so that it is secure and has good electrical contact.

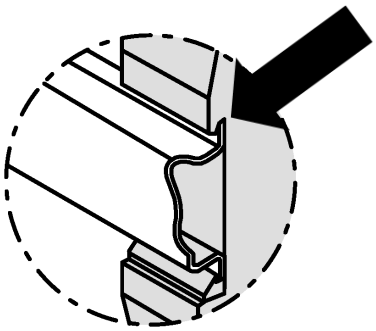

➡ Fold the module onto the DIN rail.

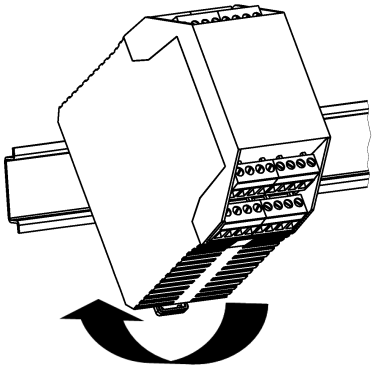

➡ Use a screwdriver to move the mounting foot against the DIN rail until the mounting foot latches into position with an audible click.

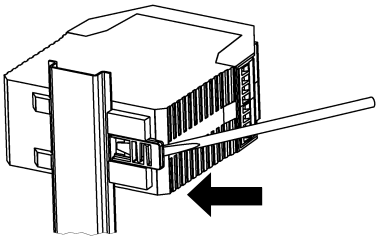

➡ Make sure that the module is securely seated on the DIN rail.
Attempt to pull the module from the DIN rail using slight pressure. If the module stays connected to the DIN rail during this test, then the installation is correct.

Step 2: Installation of gateways or expansion modules

➡ Use a screwdriver to pull the mounting foot outward.

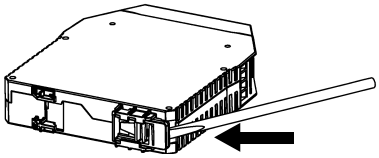

➡ Hang the module on the DIN rail.
Important! Make sure that the screening spring fits correctly.
The screening spring of the module must be placed onto the DIN Rail so that it is secure and has good electrical contact.

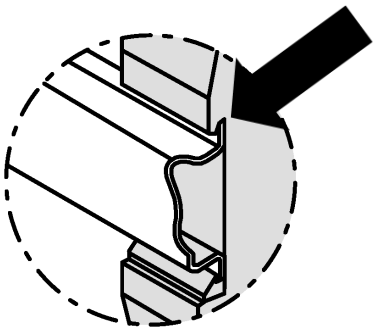

➡ Fold the module onto the DIN rail.

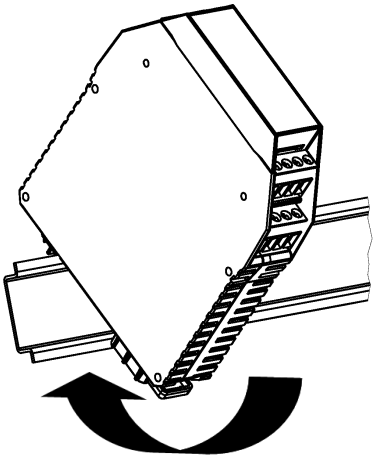

➡ Use a screwdriver to move the mounting foot against the DIN rail until the mounting foot latches into position with an audible click.

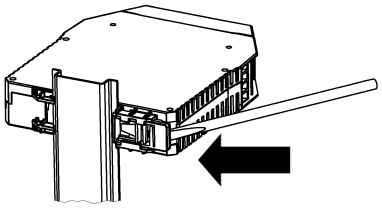

➡ Make sure that the module is securely seated on the DIN rail.
Attempt to pull the module from the DIN rail using slight pressure. If the module stays connected to the DIN rail during this test, then the installation is correct.

➡ If you are installing multiple modules:
Push the individual modules together in the direction of the arrow until the lateral plug connection between the modules audibly latches into position.

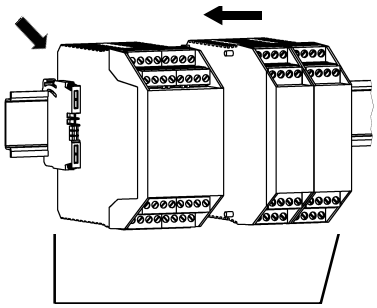

➡ Install an end terminal into the module furthest to the left and another end terminal into the module furthest to the right.

After installation

Once you have installed the modules, the following steps are required:

- *Connect the modules electrically. [ch. 4, p. 52]*
- Configure modules (see: software manual).
- *Check the installation before first commissioning. [ch. 9.2, p. 127]*

6.3 Removing modules from the DIN rail

Step 1: Removing a controller module

➡ De-energize the samos® PRO system.

➡ Remove plug-in terminals with wiring and remove the end terminal.

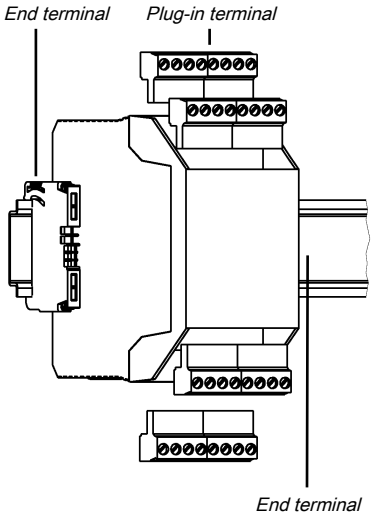

➡ If expansion modules or gateways are used:
Slide the controller module in the direction of the arrow until the lateral plug connection is disconnected.

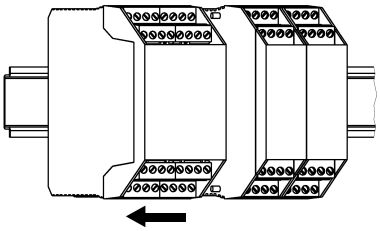

➡ Unlock the module.
To do this, pull the mounting foot of the module outward using a screwdriver.

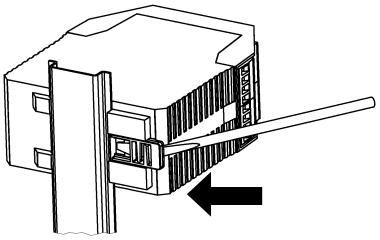

➡ Fold the module away from the DIN rail and remove from the rail.

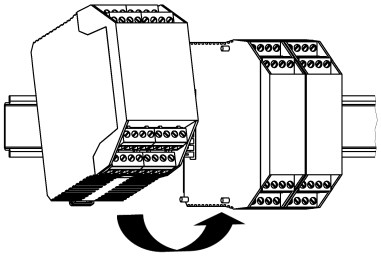

Step 2: Removing gateways and expansion modules

➡ De-energize the samos® PRO system.

➡ Remove any plug-in terminals with wiring and remove the end terminals.

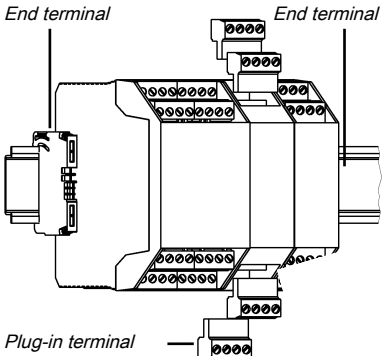

➡ Pull the modules apart from one another individually in the direction of the arrow until the lateral plug connection is disconnected.

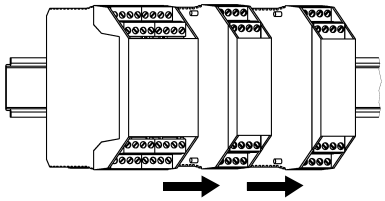

➡ Unlock the module.
To do this, pull the mounting foot of the module outward using a screwdriver.

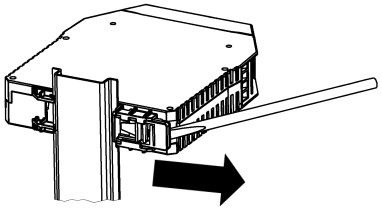

➡ Fold the module away from the DIN rail and remove from the rail.

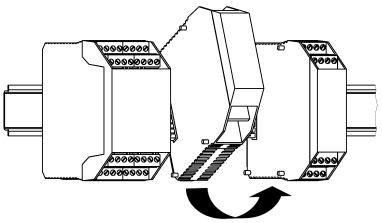

7 ELECTRICAL INSTALLATION

7.1 Requirements for electrical installation

This section describes the electrical installation of the samos® PRO system in the switchbox. You can find additional information on the electrical connection of other devices to the samos® PRO system in the section on the respective device (see Product description).

Safety information

WARNING

Switch off power to the entire system/machine!

It is possible for the system to start unintentionally while you are connecting the devices.

WARNING

Note the corresponding safety standards!

All of the safety-related parts of the system (wiring, connected sensors and command encoders, configuration, device monitoring) must meet the respective standards (e.g. EN 62061 or EN ISO 13 849-1). This can mean that the safety-related signals must be designed redundantly or that single-channel signals must be routed in a protected manner, or that short-circuit detection will be required through the use of test outputs and/or regular function tests.

- Note that short-circuit between test outputs and the corresponding input cannot be detected.
- Consider whether a screened cable or separate line routing will be required for these signals.
- In the event of a short-circuit to 24 V at an output, it will no longer be possible to switch off the output.
- Reverse current to a switched-off output of an SP-SDIO cannot be prevented and will influence the ability to switch off the outputs.

WARNING

Limited short-circuit detection in the input circuits

- One SP-COPx module has four test signal generators T1 – T4.
- One SP-SDI module has two test signal generators. One test signal generator is responsible for the odd-numbered test outputs (X1, X3, X5, and X7), while the other is responsible for the even-numbered test outputs (X2, X4, X6, and X8).
- Short-circuits between test signal generators of a SP-SDI or SP-SDIO module are detected. Between different modules, the short circuit detection is then only ensured if the test gaps of the test signal generators are < 4 ms, the test periods ≥ 200 ms and no more than 9 modules (SP-SDI / SP-SDIO) have been plugged in. Short-circuits after 24 V DC (after High) at inputs that are connected to test outputs are detected independently of the length of the test gaps.
- Please ensure that the odd-numbered test outputs (X1, X3, X5, and X7) at an SP-SDI are connected to a common test signal generator and that the even-numbered test outputs (X2, X4, X6, and X8) are connected to another common test signal generator. Therefore, short-circuits between the odd-numbered test outputs (X1, X3, X5, and X7) cannot be detected. The same applies accordingly to the even-numbered test outputs X2, X4, X6, and X8.
  Make note of this during wiring (e.g. through separate routing or protected lines)!

WARNING

Reverse current at inputs of SP-COP, SP-SDIO or SP-SDI with breakdown of ground!

In the event of an internal or external ground breakdown, reverse current can flow from the supply voltage of the COMPACT module (terminal A2) to the safe inputs of the SP-COP, SP-SDIO or SP-SDI modules. Make note of this if other inputs are connected in parallel to these inputs so that this reverse current does not lead to an unintentional high at the inputs connected in parallel.

Additional information

- The samos® PRO safety controller fulfills the EMC provisions in accordance with basic technical standard EN 61000-6-2 for the industrial sector.
- Industrial safety devices from Wieland Electric are only suitable for local direct-current applications. If the device is to be used in supply voltage networks, e.g. in accordance with IEC 61326-3-1, then additional safety measures must be implemented.
- Machines on which safety devices will be used must be installed and configured in accordance with the Lightning Protection Zone (LPZ) as per EN 62305-1. The required resistance level can be achieved by using external safety devices. The Surge Protection Devices (SPD) used must fulfill requirements in accordance with EN 61643-11.
- The system must prevent "Common Mode" malfunctions in a frequency range of 0 Hz to 150 kHz in accordance with IEC 61000-4-16.
- In order to ensure complete EMC safety, the DIN rail must be connected to functional earth (FE).
- The samos® PRO system must be installed in a switchbox with at least protection class IP 54.
- Carry out the electrical installation in accordance with EN 60204-1.
- The power supply of the devices must able to bridge a short-term power outage of 20 ms in accordance with EN 60204-1.
- The power supply must meet the regulations for low-voltage with safe disconnection (SELV, PELV) in accordance with EN 60664-1.
- You must connect all modules in the samos® PRO system, the connected safety equipment and the voltage supplies to the same 0-V DC connection (GND).
- Avoid using ground loops between the USB interface GND and the A2 connection of the controller module, e.g. by using optocouplers.
- Depending on external loads, particularly with inductive loads, additional external protective measures such as varistors or RC elements are necessary in order to protect the safety inputs and outputs. There are limits for the operation (see *Technical data [ch. 12, p. 139]*). Note that the response times may be delayed depending on the type of protective circuit.
- If a module is replaced, the correct plug-in block terminal arrangement must be ensured, e.g. through labeling or corresponding cable routing.
- If it is possible for someone to access the protective equipment from the rear (e.g. a safety light curtain), then install the reset button such that it cannot be activated by a someone who is in the hazardous area. In addition, the operator must have a complete overview of the hazardous area when operating the reset button.

7.2 Safe installation in line with EMC provisions

The samos® PRO safety controller fulfills the EMC provisions in accordance with the basic technical standard EN 61000-6-2 for the industrial sector.

In order to guarantee that the installation complies with EMC provisions, observe the following notes as well as the information provided by the manufacturers of the components used, e.g. sensors.

- The DIN rail for mounting the samos® PRO modules must be connected to the functional earth (FE).
- All the modules of the samos® PRO system, the connected safety equipment and power supply/supplies should be connected with the same 0 V DC connection (GND).
- Avoid loops between the GND potential, e.g. between the USB interface and the A2 connection on the controller module, by using interfaces with optocouplers, for example.
- Ensure that the cables between the controller modules and sensors are screened and connect only one side of the screen to GND or earth.
- Inductive loads must be equipped with appropriate protective measures, such as varistors and RC elements.
- Make sure that control and load circuits are separated when installing in the control cabinet and when laying cables.
- Use screened cables in areas that are loaded with high-frequency signals (e.g. frequency converters).

Further information on electrical installation

- Industrial safety devices from Wieland Electric are only suitable for local direct-current applications. If the device is to be used in supply voltage networks, e.g. in accordance with IEC 61326-3-1, implement additional safety measures.
- Install all components of the samos® PRO system in one control cabinet with a minimum protection class of IP 54.
- Configure electrical installation according to EN 60204-1.
- The power supply of the devices must able to bridge a short-term power outage of 20 ms in accordance with EN 60204-1. Provide appropriate power packs.
- The power supply must meet the regulations for low-voltage with safe disconnection (SELV, PELV) in accordance with EN 60664-1.
- Always ensure samos® PRO components and sensors are disconnected from the power supply before installing and connecting them.

WARNING

Observe the screen specifications

- Use screened lines to connect the sensors, if possible.
- Earth the screen on the module or in the control cabinet.
- We recommend the WST…/T35 screen grounding terminal for grounding the screen on samos® PRO.
- Position the screen grounding terminal as close to the module as possible and keep the stripped ends for connection to the module as short as possible.

NOTICE

Recommendation for sensors and line lengths for motion monitoring

The maximum line length between the sensor and the module depends on the sensor output type. To achieve a transmission that is as fault-free as possible, we recommend, besides a grounded and screened cable, using sensors with push-pull outputs.

- Sensor with open collector: max. 15 m
- Sensor with push-pull output: max. 50 m
  The attenuation factors of the cables and connecting elements used (connectors, etc.) are decisive in determining the cable lengths.
- Cables attenuate the signal. If the length is too long, an impermissibly high weakening of the signal occurs.
- If the screening is not optimal, external interference may impermissibly change the sensor signals.
- Lay the cables for the power supply to the sensors, in particular the GND cables, as close as possible to the supply cable of the SP-COP and in a star point arrangement.

7.3 Internal wiring of the supply voltage

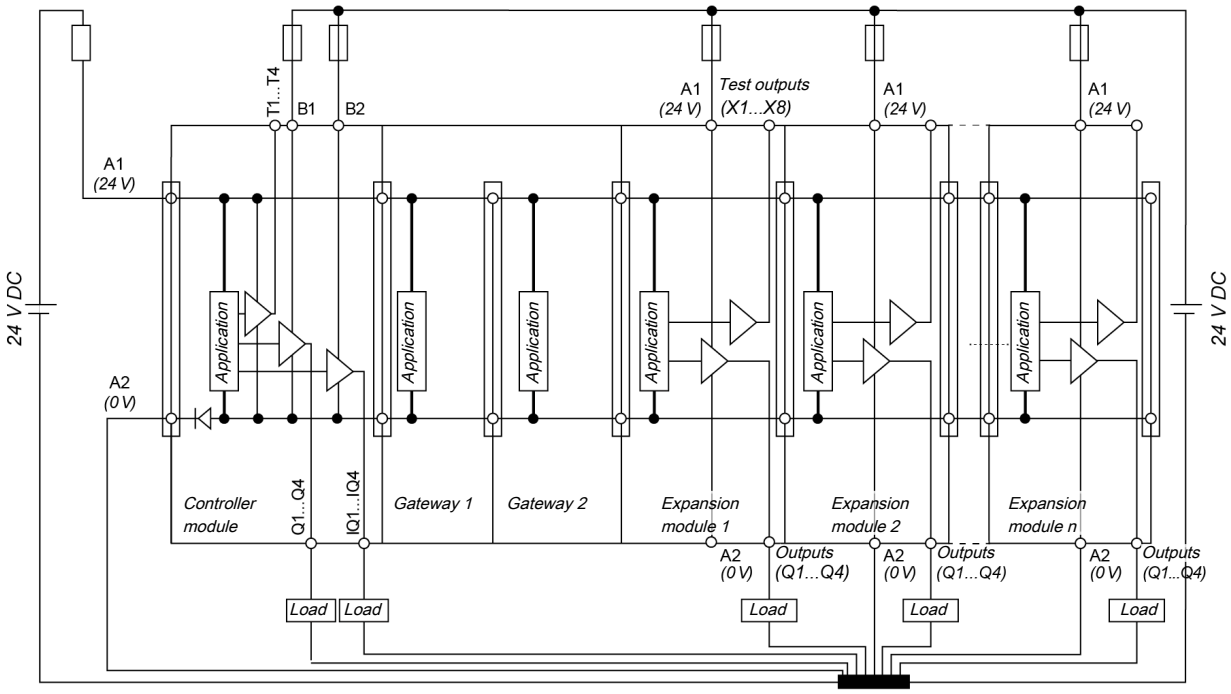

Fig. 42: Internal wiring of the samos® PRO supply voltage

8 CONFIGURATION

WARNING

Check the protective function before commissioning and after any change!

If you change the configuration, you must check the effectiveness of the protective function. To this end, note the test instructions in the operating instructions for the connected safety equipment.

Additional information

For configuring the samos® PRO system, you will require the samos® PLAN 6 software and the SP-COP-CARD1 program removable storage.

Devices that are connected to the safety controller are not generally configured and verified by the samos® PLAN 6 software. These devices have their own mechanisms for configuration and verification.

- The system configuration of the entire samos® PRO system is stored in the program removable storage. This has the advantage that the system does not have to be reconfigured when modules and/or gateways are replaced.
- The data stored in the program removable storage will be retained even if the supply voltage is interrupted.
- It is possible to transfer configuration information via the USB or Ethernet interface.

9 COMMISSIONING

WARNING

Commissioning cannot take place without testing being conducted by a qualified person!

- Before operating the system in which you are using a samos® PRO safety controller for the first time, it must be tested and documented for release by a qualified person.

WARNING

Monitor the hazardous area!

- Before commissioning, make sure that no one is inside the hazardous area.
- Check the hazardous area and secure it against access by unauthorized people (e.g. place warning notices, set up blocks, etc.). Note the corresponding laws and local regulations.

9.1 Total acceptance of the application

You may only place the system into operation if the total acceptance inspection was passed successfully. The total acceptance inspection may only be done by appropriately trained personnel.

The total acceptance comprises the following test points:

Procedure

- ➡ Check whether all of the safety-related parts of the system (wiring, connected sensors and command encoders, configuration) meet the respective standards (e.g. EN 62061 or EN ISO 13 13849).
- ➡ Test the devices connected to the safety controller in accordance with the test information in the corresponding operating instructions.
- ➡ Mark all of the connections (connection lines and plug connectors) on the safety controller clearly and uniquely to prevent mix-ups. Because the samos® PRO system has multiple connections with the same shape, make sure that connection lines or connectors that are disconnected are not unintentionally connected back to the wrong connection.
- ➡ Check the signal paths and the correct integration into higher-level controls.
- ➡ Check the correct data transmission from and to the samos® PRO safety controller.
- ➡ Check the logic program of the safety controller.
- ➡ Carry out a complete validation of the safety functions of the system in each operating mode and an error simulation. Note in particular the response times of the individual applications.
- ➡ Fully document the configuration of the system, the individual devices, and the results of the safety check.

9.2 Tests before initial commissioning

The tests before initial commissioning are used to confirm the safety requirements required in the national/international guidelines, particularly the Machinery or Work Equipment Directive (EC conformity).

Procedure

- ➡ Test the effectiveness of the safety equipment on the machine in all operating modes and functions that can be set on the machine.
- ➡ Make sure that operating personnel who will be working with the machine protected by the safety controller are trained by qualified personnel from the machine operator before starting work. The machine operator is responsible for the training.

10 DIAGNOSTICS

10.1 What to do in the event of an error

WARNING

Do not operate the system in the event of an unclear error!

- Place the machine out of operation if you cannot clearly assign an error or eliminate it safely.

WARNING

Carry out a complete function test after eliminating the error.

- Carry out a complete function test when you have eliminated an error.

10.2 Error statuses

In the event of certain malfunctions or a faulty configuration, the samos® PRO safety controller will switch to a safe state. The LEDs of the individual modules of the safety controller indicate the relevant error type.

There are various error levels depending on the type of error:

Configuration error

- The system is in the *Configuration required* state and the MS LED flashes red with 1 Hz.
- Applications in all modules are in the Stop operating state.
- All safety outputs of the system are switched off.
- All safe process data are set at zero. Typically, the non-safety-related process data are also set at zero.

Repairable errors

- The applications in all the modules remain in the Run operating state. The MS LED of the affected modules flashes alternately in red/green with 1 Hz. The MS LED of the unaffected modules turns green.
- If safety outputs are affected, then these safety outputs of the system will be switched off at a minimum.
- If safe inputs are affected, then the process data of these safe inputs at a minimum will be set at zero.

Critical error

- The system is in the *Critical error* state and the MS LED of the module that has detected the critical error flashes red with 2 Hz. The MS LED of the modules at which the error cause is unknown will be lit in red.
- Applications in all modules are in the Stop operating state.
- All safety outputs of the system are switched off.
- All safe process data are set at zero. Typically, the non-safety-related process data are also set at zero.

How to place the device back in operation:

➡ Eliminate the cause of the error in accordance with the displays of the MS and PWR/EC LEDs.

➡ With critical errors, after troubleshooting, switch off the power supply of the samos® PRO system for at least 3 seconds and then switch it on again.

Reset conditions for input errors at bit inputs

➡ Bring the inputs into a safe state (e.g. emergency stop) after removing the cause of the error at the affected input, or in case of 2-channel control of the affected inputs.

The error is cleared in this state.

With antivalent input processing, it may be necessary to change the signal generator to the active and again to the inactive state before the error state of the input pair is corrected.

The input or inputs are ready for operation again.

Reset conditions for errors at motion inputs

Errors at the motion inputs reset themselves after the error has been corrected. The erasing time is 4 ms to 40 s, depending on the type of error and any motion that may be present. Please ask our technical support for concrete values.

After the error has been cleared, the "Reset required" output of the motion functional component becomes active.

Reset conditions for errors at analog inputs

Errors at the analog inputs reset themselves after the error has been corrected. The erasing time can take between 40 ms and 3 s.

A “Reset required” can be activated in the analog function block; this switches on the manual acknowledgment functionality.

Reset conditions for errors at outputs

➡ Eliminate the cause of the error.

➡ Switch suitable input signals so that both outputs of the affected output group (Q1/Q2, Q3/Q4, IQ1/IQ2 or IQ3/IQ4) are simultaneously switched inactive by the logic.

The error is cleared in this state. Both outputs are ready for operation again

Even when using the outputs as single-channel outputs, both outputs of a group (see above) must become inactive simultaneously before the outputs are ready for operation again.

➡ With critical errors, after the error has been resolved, switch off the voltage supply of the samos® PRO system for at least 3 seconds and then switch it on again.

10.3 Error displays of the status LEDs

This section explains the meanings of the status LEDs.

A more detailed error diagnosis is possible via the error messages can be seen in the **Diagnostics** of samos® PLAN 6.

NOTICE

- You can find information on how to carry out diagnostics in the software manual, "Diagnostics” view
- You can find a list of all the error messages in this document under *List of all error messages, causes and aids [ch. 14.3, p. 180]*
  This section lists the most important error codes, possible causes and troubleshooting measures.

10.3.1 Device state and LED displays in the controller modules

Flash code meaning

Tab. 52: Key

Symbol	Meaning
○	LED off
✳	LED flashing
●	LED lights up

Reference

Tab. 53: Device state and LED displays in the controller modules

PWR/EC Power/Error-code	Meaning	Additional info
Red flashing	An error has occurred in the control. All 24 V outputs have been switched off. The control must be restarted with a power ON reset after the cause of the error has been eliminated. The number of flash pulses indicates the error class to which the occurring error belongs.	Number of flashing pulses = error class 2: Configuration data 3: Application 4: Self-test 5: Voltage/current monitoring 6: I/O modules 7: Cross-communication 8: Internal
Green flashing (1 Hz)	The supply voltage at A1, B1, or B2 is outside of the range of 16.8 V to 30 V. The PWR-L only indicates an overvoltage (30..36V) on B1 or B2 flashing if at least 1 output was configured in the output group in question.	The following applies to A1: An overvoltage > 30 V or an overvoltage > 36 V applied for longer than 1 s triggers a critical error. Only the red PWR/EC LED will then flash (5x).
Green	The supply voltage at A1, B1, and B2 is within the range of 16.8 V to 30 V.	

MS Module State	Meaning	Additional info
Red flashing (1 Hz)	There is no project at the control or the project data is faulty (because, e.g., the number of inserted I/O modules does not match the project).	No or incorrect module configuration
Green flashing (1 Hz)	Project data was adopted from control and I/O modules, control waiting for start command	
Green	Control has started.	

MS Module State	Meaning	Additional info
/ Red/green flashing	One or more inputs have a cable break or short-circuit to 24 V. Or there is a sequence/synchronization time error at a dual channel input. Or an output has a test error (e.g. short-circuit).	

CV Code Verified	Meaning	
Yellow flashing (1 Hz)	The project at the control has not been verified. The control will not start automatically after power ON reset.	
Yellow	The project at the control has been verified. The control will start automatically after power ON reset.	

NET Network Status	Meaning	
Flashing green (for 3 s)	Connection setup with control	

Input LED	Meaning	Additional info
Green flashing (1 Hz)	A single-channel input has a test error (cable break or short-circuit at 24 V) or the input was not configured in the project and 24 V is pending.	Applies to I1 to I16 (..I20) and IQ1 to IQ4 if single-channel has been configured. Flashes synchronously with MS LED in red.
Green flashing, alternating (1 Hz)	Dual channel input has synchronization time error or a sequence error or at least one of the two inputs has a test error (cable break or short-circuit at 24 V)	Applies to I1 to I16 (..I20) and IQ1 to IQ4 if dual channel has been configured. Input pair flashing on and off.
Off	Signal level at the input terminal is 0 V.	
Green	Signal level at the input terminal is 24 V.	

Output LED	Meaning	Additional info
Green flashing (1 Hz)	Output has a test error.	Applies to Q1..Q4 and IQ1..IQ4

Output LED	Meaning	Additional info
○ Off	Output is switched off.	
● Green	Output is switched off.	

10.3.2 Device state and LED displays in the safe input/output modules

NOTICE The displays of the MS LED and the input LEDs I1 to I8 are identical to those for the SP-SDIO and SP-SDI expansion modules.

Tab. 54: Displays of the MS LED

MS Module State	Meaning	Notes
○	Supply voltage outside of operating range	Check supply voltage at terminals A1 and A2.
✳ / ✳ Red/green flashing (1 Hz)	Repairable external error	Check cable of flashing inputs and outputs. If all output LEDs are flashing, check the supply voltage of terminal A1 and A2 for this module.
✳ Green flashing (1 Hz)	System is in the stop state or the voltage supply to A1 is outside the range of 16.8 V to 30 V.	Start the application in samos® PLAN 6. Check voltage supply to A1.
● Green	System in the run state and the voltage supply to A1 is within the range of 16.8V to 30V.	
✳ Red flashing (1 Hz)	Invalid configuration	
✳ Red flashing (2 Hz)	Critical error in the system; suspected in this module. Application has been stopped. All outputs are switched off.	Switch supply voltage off and back on. If the error has not been eliminated after this has been done multiple times, then replace module. In order to identify the module affected, use the diagnostics display in samos® PLAN 6.
● Red	Critical error in the system; suspected in a different module. Application has been stopped. All outputs are switched off.	Switch supply voltage off and back on. If the error has not been eliminated after this has been done multiple times, then replace module in which the red LED is flashing (2 Hz). In order to identify the module affected, use the diagnostics display in samos® PLAN 6.

Tab. 55: Displays of input LEDs

Input LEDs (I1–I8)	Meaning
○	Signal level at the input terminal is 0 V. Safety mat: Both inputs actuated.
● Green	Signal level at the input terminal is 24 V.

Input LEDs (I1–I8)	Meaning
Green (1 Hz) Synchronous with the red MS LED	Signal level at the input terminal is 0V and a repairable error at a dual channel input is pending.
Green (1 Hz) Alternating with the red MS LED	Signal level at the input is 24V and a repairable error is pending.

Tab. 56: Displays of output LEDs

Output LEDs (Q1–Q4)	Meaning
Green (1 Hz) Synchronous with the red MS LED	Output has a test error.
	Output is switched off.
Green (1 Hz)	Output is switched off.

10.3.3 Device state and LED displays in the standard input/output modules

Tab. 57: Displays of the MS LED

MS Module State	Meaning	Notes
	Supply voltage outside of operating range	Check supply voltage at terminals A1 and A2.
/ Red flashing (1 Hz)	Repairable external error	Check cable of flashing inputs and outputs. If all output LEDs are flashing, check the supply voltage of terminal A1 and A2 for this module.
Green flashing (1 Hz)	System in the stop state and waits for start command or the voltage supply to A1 / A2 is outside the range of 16.8V to 30V.	Start the application in samos® PLAN 6. Check voltage supply to A1.
Green	System in the run state and the voltage supply to A1 is within the range of 16.8V to 30V.	
Red flashing (1 Hz)	Invalid configuration	
Red flashing (2 Hz)	Critical error (type 3) in the system; suspected in this module. Application has been stopped.	Switch supply voltage off and back on. If the error has not been eliminated after this has been done multiple times, then replace module. In order to identify the module affected, use the diagnostics display in samos® PLAN 6.

MS Module State	Meaning	Notes
Red	Critical error in the system; suspected in a different module. Application has been stopped.	Switch supply voltage off and back on. If the error has not been eliminated after this has been done multiple times, then replace module in which the red LED is flashing (2 Hz). In order to identify the module affected, use the diagnostics display in samos® PLAN 6.

Tab. 58: Displays of input LEDs

Input LEDs (I1–I4 and IY5-IY8)	Meaning
	Signal level at the input terminal is 0 V. Inputs actuated.
Green	Signal level at the input terminal is 24 V. Input is not actuated.

Tab. 59: Displays of output LEDs

Output LEDs (Y1-Y4 and IY5-IY8)	Meaning
	Output is switched off.
Green	Output is switched off.
Green (1 Hz) synchronous with the red MS LED	Output has an error. (e.g. output driver overloaded)

10.3.4 Device state and LED displays of analog extended input modules

MS Module State	Meaning	Notes
	Supply voltage outside of operating range	Check supply voltage at terminals A1 and A2.
/ Red/green flashing (1 Hz)	Repairable external error	Check cable of flashing inputs and outputs. If all output LEDs are flashing, check the supply voltage of terminal A1 and A2 for this module.
Green flashing (1 Hz)	System in the stop state or the voltage supply to A1 is outside the range of 16.8V to 30V.	Start the application in samos® PLAN 6. Check voltage supply to A1.
Green	System in the run state and the voltage supply to A1 is within the range of 16.8V to 30V.	
Red flashing (1 Hz)	Invalid configuration	

MS Module State	Meaning	Notes
Red flashing (2 Hz)	Critical error in the system; suspected in this module. Application has been stopped. All outputs are switched off.	Switch supply voltage off and back on. If the error has not been eliminated after this has been done multiple times, then replace module. In order to identify the module affected, use the diagnostics display in samos® PLAN 6.
Red	Critical error in the system; suspected in a different module. Application has been stopped. All outputs are switched off.	Switch supply voltage off and back on. If the error has not been eliminated after this has been done multiple times, then replace module in which the red LED is flashing (2 Hz). In order to identify the module affected, use the diagnostics display in samos® PLAN 6.

Sensor 1 – Sensor 4	MS LED	Meaning	Notes
OFF	Green flashing (1 Hz)	System is in “STOP” state	
OFF	Green	Sensor is not connected or configured.	
OFF	Red flashing (1 Hz)	System error or sensor supply error (see also Sensor Power LED)	
OFF	/ Red/green flashing (1 Hz)	Sensor supply error	Subsequent errors for current sensors are suppressed. Error can be corrected - Check sensor wiring Only affects current sensors.
Green	Green	Sensor is connected and configured, no error or warning pending.	
Green flashing (1 Hz)	Green	A sensor is connected but not configured.	Remove or configure sensor
/ Green / red flashing (1 Hz)	/ Red/green flashing (1 Hz)	Open circuit in connected sensor.	Error can be corrected - Check sensor wiring
/ Red/green flashing (1 Hz)	/ Red/green flashing (1 Hz)	Short-circuit in connected sensor.	Error can be corrected - Check sensor wiring

Sensor 1 – Sensor 4	MS LED	Meaning	Notes
/ Green flashing (1 Hz)	/ Red/green flashing (1 Hz)	Lower limit of monitoring range configured for sensor exceeded.	
/ Green flashing (1 Hz)	/ Red/green flashing (1 Hz)	Upper limit of monitoring range configured for sensor exceeded.	

Only for SP-SAC4 and SP-SACR22:

Sensor Power	MS LED	Meaning	Notes
OFF			System error or Power OFF
Green	Green flashing (1 Hz)	System is in “STOP” state	
Green	Green	Auxiliary voltage for sensors is OK. System is in “RUN” state	
/ Red flashing (1 Hz)	/ Red/green flashing (1 Hz)	Supply voltage for sensors is too low or the output current is > 100 mA	
/ Red flashing (1 Hz)	/ Red flashing (1 Hz)	Auxiliary voltage for sensors is too high or there is a system error.	

10.4 Support

If you cannot eliminate an error with the help information contained in this section, then please contact the Wieland branch responsible for your area.

NOTICE

If you send in an SD card for repair or analysis, you will receive it back in delivery condition (factory settings). Therefore, be sure to store the configuration(s) of your devices in the samos® PLAN 6.

10.5 Expanded diagnostics

samos® PLAN 6 contains expanded diagnostics options. The software enables you to further contain the problem if you have an unclear picture of the situation or availability issues.

Please see the following for more detailed information:

- Software manual
- A complete list of all error messages is contained in the *Appendix [ch. 14.3, p. 180]*.

11 MAINTENANCE

The following section provides information on regular tests and the replacement of samos® PRO modules.

Do not attempt to remove, repair, or modify the samos® PRO modules. This may lead to loss of safety functions. Furthermore, this will void any warranty claim you may have against Wieland Electric GmbH.

11.1 Regular testing of the safety equipment by qualified persons

- Test the system according to national valid regulations within the required time frames. This is necessary in order to discover any changes in the machine or manipulations to the safety equipment after initial commissioning.
- Every security application must be tested within a time interval specified by you. The effectiveness of the safety equipment must be tested by trained and qualified persons.
- If changes are performed on the machine or safety equipment or the safety controller is refitted or repaired, check the system again according to the checklist in the Appendix.
- Carry out regular or daily inspections in order to keep the samos® PRO modules in optimum operating condition.
- Check whether the implementation of the samos® PRO modules contains all of the technical data for the device.
- Check the installation conditions and whether the wiring of the samos® PRO modules has been completed correctly.
- Conduct regular verifications to ensure that the safety functions fulfill the requirements of the application and all regulations and standards (e.g. regular testing) in order to ensure the reliability of the safety functions.

11.2 Replacing devices

A critical error in one of the samos® PRO modules will affect the entire network. Therefore, devices that have critical errors must be quickly repaired or replaced. We recommend keeping a stock of replacement samos® PRO module devices so that you can re-establish network operation as quickly as possible.

11.2.1 Safety measures when replacing devices

Follow the following safety measures when replacing samos® PRO modules:

- Do not attempt to dismantle or repair the samos® PRO modules. This not only will void warranty claims against Wieland Electric, but it is also dangerous, because in this case it is not possible to test the original safety functions.
- Place the device back into a condition in which the safety will be ensured.
- Only carry out replacement when the power supply is switched off in order to prevent electric shock or unexpected behavior from the device.
- In order to enable further use of the system configuration, check the following:
  - Is the new module of the same type (same material number) and is the new module error-free after replacement?
  - Was the new module inserted into the same position at which the replaced module was?
  - Were all plug connections connected back at the correct location?
- If not, you will need to completely reconfigure the new system and commission it including all of the necessary tests (see *Commissioning [ch. 9, p. 127]*).

NOTICE

- After replacement, make sure that no errors are occurring with the new samos® PRO modules.
- Be sure to carry out a function test before commissioning a replacement module.
- When you send in samos® PRO modules for repair, generate a report of your project in samos® PLAN 6 and carry out diagnostics; enclose a detailed description of the problem with the device, and send the samos® PRO modules along with all available information to Wieland Electric.

12 TECHNICAL DATA

12.1 Response times for basic safety functions

The response time is the time that is required to activate the safety function.

Example: The time from which the safety light barrier is crossed until the machine stops.

In order to determine the response time of the samos® PROsystem, use the standard time plus the filter and test times.

Factor 1: Standard time

Maximum ON-OFF time from input to output without filter and test times:

Tab. 60: Calculating the time values

	Input SP-COPx	Input SP-SDIO / SP-SDI	Input SP-SAC4, SP-SAR4, SP-SACR22
Output SP-COPx	2 × cycle time + 3.6 ms	2 × cycle time + 7.2 ms	2 × cycle time + 92 ms + number of mean value calculations[1] × 16 ms
Fast Shut Off (FSO) SP-COPx	11.8 ms	–	-
Output SP-SDIO	2 × cycle time + 6.9 ms	2 × cycle time + 10.6 ms	2 × cycle time + 95 ms + number of mean value calculations[1] × 16 ms
Fast Shut Off (FSO) SP-SDIO	–	8.6 ms	-
[1] Corresponds to the filter value set in the sensor properties (default: 1, maximum: 32)			

- The cycle time must be obtained from samos® PLAN 6 (bottom right).
- FSO = Fast Shut-Off: This function can be used to achieve quicker switch-off times from input to output inside the module. FSO is a functional component in the samos® PLAN 6.

Factor 2: Filter time

When the ON-OFF filter is activated, the switch-off signal is delayed by the filter time set. This filter can be activated for each input in the samos® PLAN 6 and acts upon the response time with + 8 ms.

Factor 3: Test times

If the input tests are carried out in single-channel input circuits with the assistance of tests outputs T1 to T4 or X1 to X8, this results in the response time for test times > 1 ms from the test time plus response time (wait time until the test pulse occurs).

Tab. 61: Response times

SP-COP	SP-SDI / SP-SDIO
12 ms	With the test pulse time set to 4ms ≤ t_p ≤ 12 ms: 8 ms
	With the test pulse time set to t_p > 12 ms: 12 ms

When using user-defined elements (software manual) the response time can also be extended in two-channel input circuits if the selected test time is greater than 0.5 * test period minus 12 ms. The resulting additional response time should be calculated as follows:
additional response time = test time + 12ms - 0.5 * test period
(Only a positive result is evaluated, negative values are equal to zero)

For applications with a safety mat, the test period of the test generators connected must be applied to the response time. The following table provides the reaction times for the correspondingly set test periods.

WARNING

Changed reaction times!

From module version D-03.01 of the SP-COP modules and B-08 of the SP-SDIO modules, the longer response times given in the table below apply.

In particular, for existing projects with sensor elements for safety mats and bumpers, this extension of the response times must be adhered to (e.g. in the case of replacement of a SP-COP module).

Tab. 62: Test periods and response times

Test periods for both test outputs [ms][1]		Resulting additional response time [ms]	
Test output 1	Test output 2	SP-SDIO (to B-07) SP-COP (to D-01.xx)	SP-SDIO (from B-08) SP-COP (from D-03.xx)
40	40	20	40
40	200–1000	40	80
200	200	100	200
200	400–1000	200	400
400	400	300	400
400	600 800–1000	400 400	600 800
600	600	500	600
600	800 1000	600	800 1000
800	800	700	800
800	1000	800	1000
1000	1000	900	1000
[1] Obtain the values from the report in samos® PLAN 6.			

Example

The following examples shows the determination of the response time of a safety function (sensor – logical function – actuator).

Tab. 63: Response time of a safety function

Sub-function	Time	Comment
Response time of the sensor	+ 18.0 ms	Manufacturer information
Test time for testable sensors, e.g. ESPE Type 2 contactless safety devices With testable sensors, the response time increases by the active test gap + 12 ms. Thus, with a test gap of 4 ms, there is an additional response time of 4 ms + 12 ms = 16 ms	+ 16.0 ms	Test generators T1 to T4 or X1 to X8
Filter time When the ON-OFF filter is active, + 8 ms	0.0 ms	samos® PLAN 6

Sub-function	Time	Comment
Standard time Controller module input to controller module output With a cycle time of 4 ms.	+ 11.6 ms	See table: "Standard time"
Logics for switch-off delay times If function blocks with switch-off delay are used in the logic plan, then these times have to be added to the response time.	0.0 ms	samos® PLAN 6
Actuator response time	+ 35.0 ms	Manufacturer information
Total time	**80.6 ms**	

12.1.1 Minimum switch-off time

The minimum switch-off time (e.g. of connected sensors) is the minimum time during which a switch-off condition must be present in order to be detected so that error-free switching is possible. The minimum switch-off time must be

- greater than the logic execution time and
- greater than the test gap + the maximum OFF/ON delay when the input is connected at test output X1–X8 and the test gap is > 1 ms, and
- greater than the test period + the maximum OFF/ON delay when safety mats or safety edges are being used.

12.1.2 Response time of the state flag

If an error is detected, the status data will be available in the **Logic** view of samos® PLAN 6 in the next logic cycle. The time to detection of a status error depends, among other things, on the duration of the test period and can be up to 1 s.

12.2 Response times for motion monitoring

Response time of a safety function

The user must verify the response time of each safety function t_{SF}. This depends on the safety response times t_{SR} and the error reaction times t_{Error} of all components involved. The t_{SR} of a component describes the maximum response time of the component without an error in the component or a failure occurring. The error reaction time t_{Error} is used to describe the maximum error detection time.

Several components (e.g. sensor, logic and actuator) are usually used for a safety function.

* t_{SR_Sensor} = Safety response time of input or sensor
* t_{SR_Logic} = Safety response time of the logic or samos® PRO
  Further information: *Safety response times of the logic [ch. 12.2.2, p. 142]*
* $t_{SR_Actuator}$ = Safety response time of the actuator
* t_{Error_Sensor} = Error detection time of sensor
* t_{Error_Logic} = Error detection time of the logic or samos® PRO
  Further information: *Error detection times [ch. 12.2.3, p. 143]*
* $t_{Error_Actuator}$ = Error detection time of the actuator

$$t_{SF} = t_{SR_Sensor} + t_{SR_Logic} + t_{SR_Actuator} + t_{Error}$$

If 1 motion monitoring sensor is used for the safety function, the following applies:

$t_{Error} = \max ((t_{Error_Sensor} - t_{SR_Sensor}), (t_{Error_Logic} - t_{SR_Logic}), (t_{Error_Actuator} - t_{SR_Actuator}))$

If 2 motion monitoring sensors are used for the safety function, the following applies:

$t_{Error} = \max ((t_{Error_Sensor} - t_{SR_Sensor}), 0, (t_{Error_Actuator} - t_{SR_Actuator}))$

12.2.1 Safety response time of the sensors

The time between a physical motion and the acquisition of pulses at the inputs of samos® PRO is t_{SR_Sensor}.

The following parameters influence t_{SR_Sensor}:

- The resolution of the mechanics or number of pulses/rotation for proximity sensors
- The resolution of the encoder according to the data sheet
- The processing time of the sensor (proximity sensor or encoder)

Please calculate the t_{SR_Sensor} in your application with the mechanical and sensor specifications.

12.2.2 Safety response times of the logic

The response time to a change in speed is essentially defined by the preset measuring interval. Set a short measuring interval to achieve a faster response.

However, short measuring intervals lead to a lower measuring accuracy, as the number of evaluated periods of a signal goes down. For this reason, use high-resolution rotary encoders if you want a rapid reaction to changing motion dynamics.

The higher the detected input frequency, the shorter the measuring interval can be, which will result in a shorter response time to changes in speed.

The response time is defined by the activation or deactivation of the release due to a speed a minimum of 1 measuring interval above or below the limit.

Important: Highly dynamic speed changes that occur within a measuring interval may leave the release unchanged. This happens if the sum of measured signal periods at the end of the measuring interval is not sufficient to activate or deactivate the release.

Tip: Calculate the response time from 2 measuring intervals plus the internal system runtime. You can find this in the technical data in the Hardware manual (BA000965).

The response time of the t_{SR_Logic} logic depends on:

Configured measuring interval	t_{Meas} See also Measuring interval and speed measurement
CPU cycle time	t_{Cycle} The current value for t_{Cycle} can be found in the status bar of samos® PLAN 6 to the right of the clock symbol (here: 4 ms) 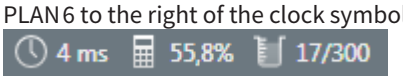 Further information: Overview of window layout
Duration of a signal period	t_{Period} Duration of a signal period (High+Low) at the sensor with the current frequency
Tolerance time	$t_{Tolerance}$ Further information: Consolidation and comparison
Bus transmission	t_{Bus} = 4 ms optional

The response time of the logic is calculated as follows:

$t_{SR_Logic} = \max(t_{Meas}, t_{Cycle}) + \max(t_{Meas}, t_{Cycle}, t_{Period}) + 4ms + t_{Tolerance} + t_{Bus}$

Please note:

- At slow speeds, the duration of a signal period may overshoot the measuring interval. In this case, the current velocity may not yet be available at the end of the measuring interval. Therefore the maximum value out of t_{Meas}, t_{Cycle} or t_{Period} in the formula for t_{SR_Logic} applies.
- You only need to take the tolerance time $t_{Tolerance}$ into account.
  - If a speed comparison (optionally according to the rotation direction) was configured between the two sensor inputs of a functional component (e.g. SSR)
    or
  - If a rotation direction comparison takes place between the two sensor inputs of a functional component (e.g. SDI).
  - The measuring interval t_{Meas} on the functional component SDI or SDI is zero.

WARNING

Further information on calculating the safety response time: Hardware manual, *Response times for motion monitoring [ch. 12.2, p. 141]*.

12.2.3 Error detection times

The error detection time t_{Error_Logic} for motion monitoring depends on:

CPU cycle time	t_{Cycle}
Frequency differences of AB sensor	$t_{Error_AB} = 0.036\ s + \sqrt{(250\ s / f)}$ If f = 0.1 Hz → t_{Error_AB} = 50.036 s (highest value) If f = 250 Hz→ t_{Error_AB} = 1.036 s If f = 70 kHz→ $_{Error_AB}$ = 0.096 s (lowest value)
Signal frequency	f in Hz
SBus transmission	t_{Bus} = 4 ms optional
Vibration filter	Option **Disabled:** $t_{Filter} = 0$ **Permanent** option: * $t_{Filter} = 0$ Option **With drive stop signal**: t_{Filter} = acceleration time
Vibration filter	Option **Disabled:** $t_{Filter} = 0$ Option **Permanent**: * $t_{Filter} = 0$ Option **With drive stop signal**: t_{Filter} = acceleration time

* The permanent vibration filter leads to a lower degree of diagnostic coverage, see Chapter "*Sensors and achievable safety levels [ch. 4.5.2, p. 83]*".

It is calculated as follows:

$t_{Error_Logic} = 2 * t_{Cycle} + \max(28\ ms, t_{Error_AB}) + t_{Bus} + t_{Filter}$

t_{Error_Logic} (worst case) $= 2 * t_{Cycle} + 54\ s + t_{Filter}$

The error detection time t_{Error_AB} for frequency differences of the AB sensor should be taken into consideration for applications which require an increased diagnostic coverage.

NOTICE

The error detection time depends on the current signal frequency f. At lower speeds, errors are detected more slowly due to the smaller edge spacing in the signal. Use the lowest frequency f = 0.1 Hz in the formulas for the worst-case analysis.

Make sure that the axis moves at the necessary time intervals and has momentum because f = 0 or a standstill can result in an infinite error detection time in certain cases. We recommend using a sensor with a higher resolution to generate this momentum, even for small movements.

NOTICE

The time response of the control and therefore the error detection depends on the application-specific cycle time of the samos® PRO controller and therefore the programmed safety functions.

The expected cycle time in the individually configured system is displayed in samos® PLAN 6 at the bottom right. This cycle time must be used to check the attainable safety level.

WARNING

For single-channel systems, the error detection time must be less than the Process Safety Time (PST). You can verify this by making a calculation using the values of the cycle time ascertained by samos® PLAN 6 for your application.

WARNING

If 2 sensors are used for each safety function, the safety response time t_{SR} must be less than the Process Safety Time (PST). You can verify this by making a calculation using the values of the cycle time ascertained by samos® PLAN 6, as well as all the measuring intervals configured for the functional components of your application.

12.3 Response times for analog value processing

Response time of a safety function

The user must verify the response time of each safety function t_{SF}. This depends on the safety response times t_{SR} of all components involved. The t_{SR} of a component describes the maximum response time of the component without an error in the component or a failure occurring.

Several components (e.g. sensor, logic and actuator) are usually used for a safety function.

* t_{SR_Sensor} = Safety response time of the sensor
* $t_{SR_analog_IN}$ = Max. safety response time of the analog module – data acquired and transferred to samos® PRO
* t_{SR_Logic} = Safety response time of the logic or samos® PRO

  Further information: *Safety response times of the logic [ch. 12.2.2, p. 142]*
* t_{AVG_ANALOG} = Delay time that can be parameterized by averaging the analog values (depending on the signal level and any limit values (to be defined by the user))
* $t_{SR_Actuator}$ = Safety response time of the actuator

$t_{SF} = t_{SR_Sensor} + t_{SR_Analog_IN} + t_{SR_Logic} + t_{AVG_ANALOG} + T_{SR_Actor}$

Only the logic and samos® PRO are considered in detail in the following.

12.4 Safety technology reference values

NOTICE

The manufacturer or designer is responsible for the risk analysis and assessment as well as for designing the technical safety parts of the control correctly. This also includes calculating the Performance Level or SIL values for the selected safety functions.

Of course, you can always contact Wieland Electric to benefit from professional risk analysis and risk assessment services.

Information on the characteristic values for motion monitoring: *Determining the attainable safety level [ch. 4.5.2.1.1, p. 83]*

12.4.1 Controller modules without I/O expansion

Tab. 64: Safety technology parameters for samos® PRO (without I/O expansion)

			Characteristic values			
Configuration of safety outputs **Output groups:** **Q1/Q2, Q3/Q4, IQ1/IQ2, IQ3/IQ4**			**Safety Integrity Level (IEC 61508)**	**Category (EN ISO 13849-1)**	**Performance level (EN ISO 13849-1)**	**PFHd**
Single-channel or dual-channel input	Dual channel outputs (with or without test pulses)		SIL3	4	PL e	$1.3 \cdot 10^{-9}$
	Single-channel output Q_n for an output group	Test pulses at all outputs of an output group activated	SIL3	4	PL e	$1.4 \cdot 10^{-9}$
		Test pulses at one output of the output group activated and test pulses at the other output of the output group deactivated. The value indicated refers to the output with activated test pulses.	SIL3	3	PL e	$1.4 \cdot 10^{-9}$
		Output test pulses deactivated	SIL2	3	PL d	$9.8 \cdot 10^{-9}$

12.4.2 Controller modules with safe digital I/O expansion

Tab. 65: Safety technology parameters for samos® PRO (with I/O expansion)

			Characteristic values			
Configuration of safety outputs **Output groups:** **SP-COPx:** **Q1/Q2, Q3/Q4, IQ1/IQ2, IQ3/IQ4** **SP-SDIO:** **Q1/Q2/Q3/Q4**			**Safety Integrity Level (IEC 61508)**	**Category (EN ISO 13849-1)**	**Performance Level (EN ISO 13849-1)**	**PFHd**
Single-channel or dual-channel input	Dual channel outputs (with or without test pulses)		SIL3	4	PL e	$4.3 \cdot 10^{-9}$
	Single-channel output Q_n for an output group	Test pulses at all outputs of an output group activated	SIL3	4	PL e	$4.3 \cdot 10^{-9}$
		Test pulses at one output of the output group activated and test pulses at the other output of the output group deactivated. The value indicated refers to the output with activated test pulses.	SIL3	3	PL e	$4.3 \cdot 10^{-9}$
		Output test pulses deactivated	SIL2	3	PL d	$1.7 \cdot 10^{-8}$

12.4.3 Controller modules with safe motion monitoring

Tab. 66: Safety technology parameters for subsystem logic (samos® PRO)

Application	See chapter	Vibration filter	Safety Integrity Level (IEC 61508)	Category (EN ISO 13849)	Performance Level (EN ISO 1384 9)	PFHd
single channel (1 sensor)	*Using a single channel sensor [ch. 4.5.2.2.1, p. 87]* *Using a sensor [ch. 4.5.2.3.1, p. 90]*	–	SIL1	1	PL c	$2.8 \cdot 10^{-8}$
2-channel (2 sensors) without direction of rotation	*Redundant use of two sensors [ch. 4.5.2.2.2, p. 88]* *Redundant use of two sensors [ch. 4.5.2.3.2, p. 91]*	–	SIL3	3	PL e	$1.2 \cdot 10^{-8}$
2-channel (2 sensor) with direction of rotation A,B or 1 standard HTL incremental encoder	*Using a sensor pair A, B [ch. 4.5.2.4.1, p. 93], Using a sensor pair (A, A/), (B,B/) [ch. 4.5.2.5.1, p. 98]* *Using a standard HTL encoder (A,B) [ch. 4.5.2.6.1, p. 100]*	None	SIL2	3	PL d	$1.2 \cdot 10^{-8}$
		Permanent	SIL1	1	PL c	$2,8 \cdot 10^{-8}$
		With drive stop signal	SIL2	3	PL d	$1.2 \cdot 10^{-8}$

Application	See chapter	Vibration filter	Safety Integrity Level (IEC 61508)	Category (EN ISO 13849)	Performance Level (EN ISO 13849)	PFHd
2 × 2-channel (4 sensors) with direction of rotation A,B or 1 standard HTL incremental encoders	*Redundant use of two sensor pairs [ch. 4.5.2.4.2, p. 95]* *Redundant use of two standard HTL encoders (A,B) [ch. 4.5.2.6.2, p. 102]*	None	SIL3	4	PL e	$1.2 \cdot 10^{-8}$
		Permanent	SIL2	3	PL d	$1.2 \cdot 10^{-8}$
		With drive stop signal	SIL2	3	PL d	$1.2 \cdot 10^{-8}$
Safe SENC HTL encoder with 2 tracks A,B	*Using a SENC encoder (A,B) [ch. 4.5.2.8.1, p. 106]*	None	SIL3	3	PL e	$1.2 \cdot 10^{-8}$
		Permanent	SIL2	2	PL d	$2.8 \cdot 10^{-8}$
		With drive stop signal	SIL2	3	PL d	$1.2 \cdot 10^{-8}$
2 safe SENC HTL encoders with 2 tracks A,B	*Redundant use of two SENC encoders (A,B) [ch. 4.5.2.8.2, p. 107]*	None	SIL3	3	PL e	$1.2 \cdot 10^{-8}$
		Permanent	SIL2	3	PL d	$1.2 \cdot 10^{-8}$
		With drive stop signal	SIL2	3	PL d	$1.2 \cdot 10^{-8}$
Safe SENC HTL encoder with antivalent signals A, A/, B, B/	*Safe SENC HTL encoder with antivalent signals A, A/, B, B/ [ch. 4.5.2.9, p. 108]*	None	SIL3	4	PL e	$1.2 \cdot 10^{-8}$
		Permanent	SIL2	3	PL d	$1.2 \cdot 10^{-8}$
		With drive stop signal	SIL3	4	PL e	$1.2 \cdot 10^{-8}$

WARNING

The listed characteristic values of the table above only refer to the logic subsystem or samos® PRO. Please therefore ensure that you read through the relevant chapter for the application and standards carefully in order to be able to evaluate the sensor and actuator subsystem.

Further information: *Contactless safety sensors [ch. 4.2, p. 59]*

12.4.4 Controller modules without safe digital I/O expansion and with safe analog input expansion

12.4.4.1 Analog input with current sensor and without safe output expansion

One current sensor

Tab. 67: Safety parameters of samos® PRO having an analog input with one current sensor

			Characteristic values				
Configuration of safety outputs **Output groups:** **Q1/Q2, Q3/Q4, IQ1/IQ2, IQ3/IQ4**			**Safety Integrity Level (IEC 61508)**	**Category (EN ISO 13849)**	**Performance Level (EN ISO 13849)**	**PFHd**	**PFD**
Single channel analog input	Dual channel outputs (with or without test pulses)		SIL2	3	PL d	$2.1 \cdot 10^{-8}$	$9.1 \cdot 10^{-5}$
	Single-channel output Q_n for an output group	Test pulses at all outputs of an output group activated	SIL2	3	PL d	$2.1 \cdot 10^{-8}$	$9.1 \cdot 10^{-5}$
		Test pulses at one output of the output group activated and test pulses at the other output of the output group deactivated. The value indicated refers to the output with activated test pulses.	SIL2	3	PL d	$2.1 \cdot 10^{-8}$	$9.1 \cdot 10^{-5}$
		Output test pulses deactivated	SIL2	3	PL d	$2.9 \cdot 10^{-8}$	$1.3 \cdot 10^{-4}$

Two current sensors (redundant)

Tab. 68: Safety parameters of samos® PRO having an analog input with two current sensors

			Characteristic values				
Configuration of safety outputs **Output groups:** **Q1/Q2, Q3/Q4, IQ1/IQ2, IQ3/IQ4**			**Safety Integrity Level (IEC 61508)**	**Category (EN ISO 13849)**	**Performance Level (EN ISO 13849)**	**PFHd**	**PFD**
Dual channel analog input	Dual channel outputs (with or without test pulses)		SIL3	4	PL e	$4.2 \cdot 10^{-9}$	$1.8 \cdot 10^{-5}$
	Single-channel output Q_n for an output group	Test pulses at all outputs of an output group activated	SIL3	4	PL e	$4.3 \cdot 10^{-9}$	$1.9 \cdot 10^{-5}$
		Test pulses at one output of the output group activated and test pulses at the other output of the output group deactivated. The value indicated refers to the output with activated test pulses.	SIL3	3	PL e	$4.3 \cdot 10^{-9}$	$1.9 \cdot 10^{-5}$
		Output test pulses deactivated	SIL2	3	PL d	$1.3 \cdot 10^{-8}$	$5.6 \cdot 10^{-5}$

One SIL3 sensor and two analog modules

Tab. 69: Safety parameters of samos® PRO having an analog input with two current sensors

			Characteristic values				
Configuration of safety outputs **Output groups:** **Q1/Q2, Q3/Q4, IQ1/IQ2, IQ3/IQ4**			**Safety Integrity Level (IEC 61508)**	**Category (EN ISO 13849)**	**Performance Level (EN ISO 13849)**	**PFHd**	**PFD**
One SIL3 sensor	Dual channel outputs (with or without test pulses)		SIL3	4	PL e	$1.7 \cdot 10^{-9}$	$7.3 \cdot 10^{-6}$
	Single-channel output Q_n for an output group	Test pulses at all outputs of an output group activated	SIL3	4	PL e	$1.8 \cdot 10^{-9}$	$7.7 \cdot 10^{-6}$
		Test pulses at one output of the output group activated and test pulses at the other output of the output group deactivated. The value indicated refers to the output with activated test pulses.	SIL3	3	PL e	$1.8 \cdot 10^{-9}$	$7.7 \cdot 10^{-6}$
		Output test pulses deactivated	SIL2	3	PL d	$1.0 \cdot 10^{-8}$	$4.5 \cdot 10^{-5}$

12.4.4.2 Analog input with resistance sensor and without safe output expansion

One resistance sensor

Tab. 70: Safety parameters of samos® PRO having an analog input with one resistance sensor

			Characteristic values				
Configuration of safety outputs **Output groups:** **Q1/Q2, Q3/Q4, IQ1/IQ2, IQ3/IQ4**			**Safety Integrity Level (IEC 61508)**	**Category (EN ISO 13849)**	**Performance Level (EN ISO 13849)**	**PFHd**	**PFD**
Single channel analog input	Dual channel outputs (with or without test pulses)		SIL2	3	PL d	$4.1 \cdot 10^{-9}$	$1.8 \cdot 10^{-5}$
	Single-channel output Q_n for an output group	Test pulses at all outputs of an output group activated	SIL2	3	PL d	$4.1 \cdot 10^{-9}$	$1.8 \cdot 10^{-5}$
		Test pulses at one output of the output group activated and test pulses at the other output of the output group deactivated. The value indicated refers to the output with activated test pulses.	SIL2	3	PL d	$4.1 \cdot 10^{-9}$	$1.8 \cdot 10^{-5}$
		Output test pulses deactivated	SIL2	3	PL d	$1.3 \cdot 10^{-8}$	$5.5 \cdot 10^{-5}$

Two resistance sensors (redundant)

Tab. 71: Safety parameters of samos® PRO having an analog input with two resistance sensors

			Characteristic values				
Configuration of safety outputs **Output groups:** **SP-COPx:** **Q1/Q2, Q3/Q4, IQ1/IQ2, IQ3/IQ4**			**Safety Integrity Level (IEC 61508)**	**Category (EN ISO 13849)**	**Performance Level (EN ISO 13849)**	**PFHd**	**PFD**
Dual channel analog input	Dual channel outputs (with or without test pulses)		SIL3	4	PL e	$3.9 \cdot 10^{-9}$	$1.7 \cdot 10^{-5}$
	Single-channel output Q_n for an output group	Test pulses at all outputs of an output group activated	SIL3	4	PL e	$4.0 \cdot 10^{-9}$	$1.7 \cdot 10^{-5}$
		Test pulses at one output of the output group activated and test pulses at the other output of the output group deactivated. The value indicated refers to the output with activated test pulses.	SIL3	3	PL e	$4.0 \cdot 10^{-9}$	$1.7 \cdot 10^{-5}$
		Output test pulses deactivated	SIL2	3	PL d	$1.2 \cdot 10^{-8}$	$5.4 \cdot 10^{-5}$

12.4.5 Controller modules with safe digital output expansion and safe analog input expansion

12.4.5.1 Analog input with current sensor and safe digital output expansion

One current sensor

Tab. 72: Safety parameters of samos® PRO (SP-COPx + SP-SDIO) having an analog input with one current sensor

			Characteristic values				
Configuration of safety outputs **Output groups:** **SP-COPx:** **Q1/Q2, Q3/Q4, IQ1/IQ2, IQ3/IQ4** **SP-SDIO:** **Q1/Q2/Q3/Q4**			**Safety Integrity Level (IEC 61508)**	**Category (EN ISO 13849)**	**Performance Level (EN ISO 13849)**	**PFHd**	**PFD**
Single channel analog input	Dual channel outputs (with or without test pulses)		SIL2	3	PL d	$2.4 \cdot 10^{-8}$	$1.0 \cdot 10^{-4}$
	Single-channel output Q_n for an output group	Test pulses at all outputs of an output group activated	SIL2	3	PL d	$2.4 \cdot 10^{-8}$	$1.0 \cdot 10^{-4}$
		Test pulses at one output of the output group activated and test pulses at the other output of the output group deactivated. The value indicated refers to the output with activated test pulses.	SIL2	3	PL d	$2.4 \cdot 10^{-8}$	$1.0 \cdot 10^{-4}$
		Output test pulses deactivated	SIL2	3	PL d	$3.6 \cdot 10^{-8}$	$1.6 \cdot 10^{-4}$

Two current sensors (redundant)

Tab. 73: Safety parameters of samos® PRO (SP-COPx + SP-SDIO) having an analog input with two current sensors

			Characteristic values				
Configuration of safety outputs **Output groups:** **SP-COPx:** **Q1/Q2, Q3/Q4, IQ1/IQ2, IQ3/IQ4** **SP-SDIO:** **Q1/Q2/Q3/Q4**			**Safety Integrity Level (IEC 61508)**	**Category (EN ISO 13849)**	**Performance Level (EN ISO 13849)**	**PFHd**	**PFD**
Dual channel analog input	Dual channel outputs (with or without test pulses)		SIL3	4	PL e	$7.2 \cdot 10^{-9}$	$3.1 \cdot 10^{-5}$
	Single-channel output Q_n for an output group	Test pulses at all outputs of an output group activated	SIL3	4	PL e	$7.2 \cdot 10^{-9}$	$3.1 \cdot 10^{-5}$
		Test pulses at one output of the output group activated and test pulses at the other output of the output group deactivated. The value indicated refers to the output with activated test pulses.	SIL3	3	PL e	$7.2 \cdot 10^{-9}$	$3.1 \cdot 10^{-5}$

			Characteristic values				
Configuration of safety outputs **Output groups:** **SP-COPx:** **Q1/Q2, Q3/Q4, IQ1/IQ2, IQ3/IQ4** **SP-SDIO:** **Q1/Q2/Q3/Q4**			**Safety Integrity Level (IEC 61508)**	**Category (EN ISO 13849)**	**Performance Level (EN ISO 13849)**	**PFHd**	**PFD**
		Output test pulses deactivated	SIL2	3	PL d	$2 \cdot 10^{-8}$	$8.6 \cdot 10^{-5}$

One SIL3 sensor and two analog modules

Tab. 74: Safety parameters of samos®PRO (SP-COPx + SP-SDIO) having an analog input with two current sensors

			Characteristic values				
Configuration of safety outputs **Output groups:** **SP-COPx:** **Q1/Q2, Q3/Q4, IQ1/IQ2, IQ3/IQ4** **SP-SDIO:** **Q1/Q2/Q3/Q4**			**Safety Integrity Level (IEC 61508)**	**Category (EN ISO 13849)**	**Performance Level (EN ISO 13849)**	**PFHd**	**PFD**
One SIL3 sensor	Dual channel outputs (with or without test pulses)		SIL3	4	PL e	$4.6 \cdot 10^{-9}$	$2.0 \cdot 10^{-5}$
	Single-channel output Q_n for an output group	Test pulses at all outputs of an output group activated	SIL3	4	PL e	$4.7 \cdot 10^{-9}$	$2.0 \cdot 10^{-5}$
		Test pulses at one output of the output group activated and test pulses at the other output of the output group deactivated. The value indicated refers to the output with activated test pulses.	SIL3	3	PL e	$4.7 \cdot 10^{-9}$	$2.0 \cdot 10^{-5}$
		Output test pulses deactivated	SIL2	3	PL d	$1.7 \cdot 10^{-8}$	$7.5 \cdot 10^{-5}$

12.4.5.2 Analog input with resistance sensor and safe digital output expansion

One resistance sensor

Tab. 75: Safety parameters of samos® PRO (SP-COPx + SP-SDIO) having an analog input with one resistance sensor

			Characteristic values				
Configuration of safety outputs **Output groups:** **Q1/Q2, Q3/Q4, IQ1/IQ2, IQ3/IQ4** **SP-SDIO:** **Q1/Q2/Q3/Q4**			**Safety Integrity Level (IEC 61508)**	**Category (EN ISO 13849)**	**Performance Level (EN ISO 13849)**	**PFHd**	**PFD**
Single channel analog input	Dual channel outputs (with or without test pulses)		SIL2	3	PL d	$7.1 \cdot 10^{-9}$	$3.1 \cdot 10^{-5}$
	Single-channel output Q_n for an output group	Test pulses at all outputs of an output group activated	SIL2	3	PL d	$7.2 \cdot 10^{-9}$	$3.1 \cdot 10^{-5}$
		Test pulses at one output of the output group activated and test pulses at the other output of the output group deactivated. The value indicated refers to the output with activated test pulses.	SIL2	3	PL d	$7.2 \cdot 10^{-9}$	$3.1 \cdot 10^{-5}$
		Output test pulses deactivated	SIL2	3	PL d	$2.0 \cdot 10^{-8}$	$8.6 \cdot 10^{-5}$

Two resistance sensors (redundant)

Tab. 76: Safety parameters of samos® PRO (SP-COPx + SP-SDIO) having an analog input with two resistance sensors

			Characteristic values				
Configuration of safety outputs **Output groups:** **SP-COPx:** **Q1/Q2, Q3/Q4, IQ1/IQ2, IQ3/IQ4** **SP-SDIO:** **Q1/Q2/Q3/Q4**			**Safety Integrity Level (IEC 61508)**	**Category (EN ISO 13849)**	**Performance Level (EN ISO 13849)**	**PFHd**	**PFD**
Dual channel analog input	Dual channel outputs (with or without test pulses)		SIL3	4	PL e	$6.8 \cdot 10^{-9}$	$3.1 \cdot 10^{-5}$
	Single-channel output Q_n for an output group	Test pulses at all outputs of an output group activated	SIL3	4	PL e	$6.9 \cdot 10^{-9}$	$3.0 \cdot 10^{-5}$
		Test pulses at one output of the output group activated and test pulses at the other output of the output group deactivated. The value indicated refers to the output with activated test pulses.	SIL3	3	PL e	$6.9 \cdot 10^{-9}$	$3.0 \cdot 10^{-5}$
		Output test pulses deactivated	SIL2	3	PL d	$2.0 \cdot 10^{-8}$	$8.4 \cdot 10^{-5}$

12.5 Data sheet

12.5.1 Controller module

samos® PRO COMPACT and COMPACT PLUS

Tab. 77: Data sheet for samos® PRO COMPACT and COMPACT PLUS

	SP-COP1-x / SP-COP2-EN-x / SP-COP2-ENI-x SP-COP1-P-x / SP-COP2-EN-P-x / SP-COP2-ENI-P-x	
Security Integrity Level	SIL3 (IEC 61508)	
SIL claim limit [1]	SILCL3 (EN 62061)	
Category	Category 4 (EN ISO 13849-1)	
Performance level [1]	PL e (EN ISO 13849-1)	
PFHd (average probability of a hazard-causing failure per hour)	1.1E-09 1/h	
T_M (usage time)	20 years (EN ISO 13849)	
Protection class	III (EN 61140)	
Protection type	IP 20 (EN 60529)	
Ambient temperature during operation	-25 to +65°C	
Storage temperature	-25 to +70°C	
Humidity	10 to 95%, non-condensing	
Fatigue strength	5 … 150 Hz (EN 60068-2-6)	
Shock resistance • Continuous shock • Single shock	 10 g, 16 ms (EN 60068-2-29) 30 g, 11 ms (EN 60068-2-27)	
Operating elevation	No more than 2,000 m above sea level (80 kPa)	
Electromagnetic compatibility	Class A (EN 61000-6-2, EN 55011)	
Data interface	Internal safety bus	
Configuration interface 1	USB mini	
Configuration interface 2	RJ 45	
Plug-in terminal blocks and connection data	**Screw terminal**	**Spring-loaded terminal**
Single-wire or fine-strand	1 x 0.2 … 2.5 mm^2 or 2 x 0.2 … 1.0 mm^2	2 x 0.2 … 1.5 mm^2
Fine-strand with ferrules	1 × 0.25 … 2.5 mm^2 or 2 × 0.25 … 1.0 mm^2	2 × 0.25 … 1.5 mm^2
Conductor size AWG (use copper cables only)	26…14	24 ... 16
Maximum tightening torque	0.5 … 0.6 Nm (5 … 7 lbf-in)	—
Stripping length	7 mm	
Dimensions (W × H × L)	45 × 96.6 × 121 mm	45 × 107 × 121 mm
Weight	290 g (± 5%)	290 g (± 5%)

	SP-COP1-x / SP-COP2-EN-x / SP-COP2-ENI-x SP-COP1-P-x / SP-COP2-EN-P-x / SP-COP2-ENI-P-x
Power supply for the system (A1, A2)	
Supply voltage	24 V DC +25% / -30% (general) 24 V DC (19.2 … 29 V DC) (for EN 298, up to module version G-xx only)
Type of power supply	PELV oder SELV: The output voltage of the power pack must be limited to ≤ 36 V DC in the event of an error (EN 61204-1: Chap. 3.17, up to class D). The output current of the power pack must be limited to a maximum of 4 A – either by the power pack itself or by a fuse. UL 508: Use a galvanically isolated power supply with limited output voltage and power (42.4 VDC, 100 VA). The output voltage must be safeguarded by a fuse that meets the standards according to UL 248. Connect all supply connections of the system to a common source and ensure a common ground connection when using several sources.
Power consumption Caution: The power consumption increases with each module that is connected to the system.	Max. 3.3 W
Short-circuit protection	4 A gG (with tripping characteristic B or C)
Power supply for output groups B1 and B2 (B2: only SP-COP2-ENx**)**	
Supply voltage	24 V DC +25% / -30%
Type of power supply	PELV or SELV The output voltage of the power pack must be limited to ≤ 36 V DC in the event of an error (EN 61204-1: Chap. 3.17, up to class D). The output current of the power pack must be limited externally to a maximum of 8 A per output group (B1 and B2) – either by the power pack itself or by a fuse.
Power consumption	2 × 0.3 W
Switch-on time	Max. 18 s
Short-circuit protection	8 A gG (with tripping characteristic B or C)
Safety inputs SP-COP1/ SP-COP1-P (up to module version G-xx): I1 … I20 SP-COP2-x: I1 … I16, IQ1 … IQ4	
Input voltage HIGH	13 to 30 V DC
Input voltage LOW	-5 to +5 V DC
Input current HIGH	Type 2.3 mA / Max. 6 mA
Input current LOW	< 2 mA
Input capacity	10 nF
Input reverse current with ground breakdown [2]	< 0.1 mA

	SP-COP1-x / SP-COP2-EN-x / SP-COP2-ENI-x SP-COP1-P-x / SP-COP2-EN-P-x / SP-COP2-ENI-P-x
Maximum input frequency that can be processed	Condition: t_{on} and t_{off} must be > $t_{CycleTime}$ f_{max} < 0.5 * 1 / $t_{CycleTime}$ e.g.: < 125 Hz at duty cycle 50%, logic cycle time 4 ms
Maximum applied input frequency	I1 … I12: < 2 kHz I13 … I16: < 250 Hz (up to module version G-xx) I13 … I16: < 2 kHz (from module version H-xx) I17 … I20 and IQ1 … IQ4: < 250 Hz
Test outputs (T1 - T4)	
Number of outputs	4 (with 4 test signal generators)
Type of output	Semiconductor, push-pull, short-circuit-proof
Output voltage HIGH	U_{A1} - 1.2 V
Output current LOW	-10 mA (limited)
Output current HIGH	Single output: max. 120 mA Total of all test outputs: max. 120 mA
Test pulse rate (test period)	1 to 25 Hz, configurable
Test pulse duration (test gap)	1 to 100 ms, configurable
Load capacity	1 µF for test gap ≥ 4 ms 0.22 µF for test gap 1 ms
Line resistance	< 100 Ω
Safety outputs for SP-COP1/ SP-COP1-P (up to module version G-xx): Q1 … Q4 SP-COP2-x: Q1 … Q4, IQ1 - IQ4	
Number of outputs	4
	8 (4 fixed and 4 selectable outputs)
Type of output	High-side MOSFET, short-circuit-proof and current-monitored
Output voltage HIGH	$U_{Bx} \geq U_{Qn} \geq U_{Bx}$ - 0.6 V
Output current HIGH Max. overload current/duration	≤ 4.0 A ≤ 12 A / 8 ms
Total current I_{tot} T_U ≤ 45°C T_U ≤ 55°C T_U ≤ 65°C	Per output pair (Q1/2, Q3/4, IQ1/2, IQ3/4) ≤ 4.0 A ≤ 2.5 A ≤ 0.9 A
Output test, can be deactivated [3,4,5] Test pulse width Test pulse rate	 ≤ 450 µs 10 Hz
Leakage current Low [6]	< 0.1 mA
Load capacity	0.5 µF
Line resistance [7]	< 200 Ω

	SP-COP1-x / SP-COP2-EN-x / SP-COP2-ENI-x SP-COP1-P-x / SP-COP2-EN-P-x / SP-COP2-ENI-P-x
Maximum permissible coil energy without external protection elements [8]	< 0.125 J
Response time	Depends on logic setup (Details: *Response times for basic safety functions [ch. 12.1, p. 139]*)

samos® PRO MOTION

Tab. 78: Data sheet for samos® PRO MOTION

	SP-COP1-M-x / SP-COP2-ENI-M-x / SP-COP2-EN-M	
Security Integrity Level	SIL3 (IEC 61508)	
SIL claim limit [1]	SILCL3 (EN 62061)	
Category	Category 4 (EN ISO 13849-1)	
Performance level [1]	PL e (EN ISO 13849-1)	
PFHd (average probability of a hazard-causing failure per hour)	1.1E-09 1/h	
T_M (usage time)	20 years (EN ISO 13849)	
Protection class	III (EN 61140)	
Protection type	IP 20 (EN 60529)	
Ambient temperature during operation	-25 to +65 °C	
Storage temperature	-25 to +70 °C	
Humidity	10 to 95%, non-condensing	
Vibration resistance	5 … 150 Hz (EN 60068-2-6)	
Shock resistance • Continuous shock • Single shock	 10 g, 16 ms (EN 60068-2-29) 30 g, 11 ms (EN 60068-2-27)	
Operating elevation	No more than 2,000 m above sea level (80 kPa)	
Electromagnetic compatibility	Class A (EN 61000-6-2, EN 55011)	
Data interface	Internal safety bus	
Configuration interface 1	USB mini	
Configuration interface 2	RJ 45	
Plug-in terminal blocks and connection data	**Screw terminal**	**Spring-loaded terminal**
Single-wire or fine-strand	1 x 0.2 … 2.5 mm^2 or 2 x 0.2 … 1.0 mm^2	2 x 0.2 … 1.5 mm^2
Fine-strand with ferrules	1 × 0.25 … 2.5 mm^2 or 2 × 0.25 … 1.0 mm^2	2 × 0.25 … 1.5 mm^2
Conductor size AWG (use copper cables only)	26…14	24 ... 16
Maximum tightening torque	0.5 … 0.6 Nm (5 … 7 lbf-in)	—

	SP-COP1-M-x / SP-COP2-ENI-M-x / SP-COP2-EN-M	
Stripping length	7 mm	
Dimensions (W × H × L)	45 × 96.6 × 121 mm	45 × 107 × 121 mm
Weight	290 g (± 5%)	290 g (± 5%)
Power supply for the system (A1, A2)		
Supply voltage	24 V DC +25% / -30% (general) 24 V DC (19.2 … 29 V DC) (for EN 298, up to module version G-xx only)	
Type of power supply	PELV or SELV The output voltage of the power pack must be limited to ≤ 36 V DC in the event of an error (EN 61204-1: Chap. 3.17, up to class D). The output current of the power pack must be limited to a maximum of 4 A – either by the power pack itself or by a fuse. UL 508: Use a galvanically isolated power supply with limited output voltage and power (42.4 VDC, 100 VA). The output voltage must be secured by a fuse that meets the standards according to UL 248. Connect all supply connections of the system to a common source and ensure a common ground connection when using several sources.	
Power consumption Caution: The power consumption increases with each module that is connected to the system.	Max. 3.3 W	
Short-circuit protection	4 A gG (with tripping characteristic B or C)	
Power supply for output groups B1 and B2 (B2: only for SP-COP1-M from module version H-xx, SP-COP2-ENI-M and SP-COP2-M)		
Supply voltage	24 V DC +25% / -30%	
Type of power supply	PELV or SELV The output voltage of the power pack must be limited to ≤ 36 V DC in the event of an error (EN 61204-1: Chap. 3.17, up to class D). The output current of the power pack must be limited externally to a maximum of 8 A per output group (B1 and B2) – either by the power pack itself or by a fuse.	
Power consumption	2 x 0.3 W	
Switch-on time	Max. 18 s	
Short-circuit protection	8 A gG (with tripping characteristic B or C)	
Digital safety inputs SP-COP1-M (up to module version G-xx): I1 …I12, I17…I20 SP-COP2-ENI-M: I1 … I12, IQ1 … IQ4		
Input voltage HIGH	13 to 30 V DC	
Input voltage LOW	-5 to +5 V DC	
Input current HIGH	Type 2.3 mA / Max. 6 mA	
Input current LOW	< 2 mA	

	SP-COP1-M-x / SP-COP2-ENI-M-x / SP-COP2-EN-M	
Input capacity	10 nF	
Input reverse current with ground breakdown [2]	< 0.1 mA	
Maximum input frequency that can be processed	Condition: t_{on} and t_{off} must be > $t_{CycleTime}$ f_{max} < 0.5 * 1 / $t_{CycleTime}$ e.g.: < 125 Hz at duty cycle 50%, logic cycle time 4 ms	
Maximum applied input frequency	I1 … I12: < 2 kHz I17 … I20 and IQ1 … IQ4: < 250 Hz	
Fast safety inputs All models: I13 … I16		
Input voltage HIGH	15 to 30 V DC	
Input voltage LOW	-5 to +5 V DC	
Input current HIGH	Type 6 mA	
Input current LOW	Type 6 mA	
Input capacity	1 nF	
Input reverse current with ground breakdown [2]	10 mA	
Maximum input frequency	70 kHz	
Test outputs (T1 - T4)		
Number of outputs	4 (with 4 test signal generators)	
Type of output	Semiconductor, push-pull, short-circuit-proof	
Output voltage HIGH	U_{A1} - 1.2 V	
Output current LOW	-10 mA (limited)	
Output current HIGH	Single output: max. 120 mA Total of all test outputs: max. 120 mA	
Test pulse rate (test period)	1 to 25 Hz, configurable	
Test pulse duration (test gap)	1 to 100 ms, configurable	
Load capacity	1 µF for test gap ≥ 4 ms 0.22 µF for test gap 1 ms	
Line resistance	< 100 Ω	
Safety outputs for SP-COP1 (up to module version G-xx): Q1 … Q4 SP-COP1-M (up to build state G-xx) / SP-COP2-EN-M / SP-COP2-ENI-M: Q1 … Q4, IQ1 - IQ4		
Number of outputs	SP-COP1-M (up to module version G-xx)	4
	SP-COP2-EN-M / SP-COP2-ENI-M	8 (4 fixed and 4 selectable outputs)
Type of output	High-side MOSFET, short-circuit-proof and current-monitored	
Output voltage HIGH	$U_{Bx} \geq U_{Qn} \geq U_{Bx}$ - 0.6 V	

	SP-COP1-M-x / SP-COP2-ENI-M-x / SP-COP2-EN-M
Output current HIGH Max. overload current/duration	≤ 4.0 A ≤ 12 A / 8 ms
Total current I_{tot} T_U ≤ 45°C T_U ≤ 55°C T_U ≤ 65°C	Per output pair (Q1/2, Q3/4, IQ1/2, IQ3/4) ≤ 4.0 A ≤ 2.5 A ≤ 0.9 A
Output test, can be deactivated [3,4,5] Test pulse width Test pulse rate	 ≤ 450 µs 10 Hz
Leakage current Low [6]	< 0.1 mA
Load capacity	0.5 µF
Line resistance [7]	< 200 Ω
Maximum permissible coil energy without external protection elements [8]	< 0.125 J
Response time	Depends on logic setup (Details: *Response times for basic safety functions [ch. 12.1, p. 139]*)

[1] For detailed information regarding the safety configuration of your machine/system, please contact the Wieland Electric branch in charge of your area.

[2] Do not connect any other safe inputs in parallel when the reverse current could lead to a HIGH state at the other input.

[3] When activated; in which case, the outputs are tested regularly (brief LOW switching). When selecting the downstream control elements, make sure that the test pulses will not cause switch-off with the previously listed parameters or deactivate the test pulses at the outputs.

[4] When safety outputs are being used without test pulses, then either all of the safety outputs without test pulses must be switched off at least once a year simultaneously for at least one second or the samos® PRO system must be restarted by switching off the supply voltage.

[5] If safety outputs are being used without test pulses:
Use screened or separate cabling for safety outputs without output tests because short-circuits to 24 V will not be immediately detected.

[6] In the event of a fault (interruption in the 0 V line), the maximum of the leakage current will flow in the OSSD line. The downstream control element must determine this state as being LOW. An FPLC (Failsafe Programmable Logic Controller) must be able to detect this state.

[7] Limit the line resistance of the individual lines to the downstream control element to this value in order to ensure that a short-circuit will be reliably detected between the outputs. (Also see EN 60204, Safety of machinery - Electrical equipment of machines - Part 1: General requirements.)

[8] Examples of the resulting maximum coil inductance:
1000 mH @ 0.5 A, 250 mH @ 1 A, 62.5 mH @ 2 A

12.5.2 Safe input/output expansion module

Tab. 79: SP-SDIO data sheet

	SP-SDIO
Security Integrity Level	SIL3 (IEC 61508)
SIL claim limit [1]	SILCL3 (EN 62061)

	SP-SDIO	
Category	Category 4 (EN ISO 13849-1)	
Performance level [1]	PL e (EN ISO 13849-1)	
PFHd (average probability of a hazard-causing failure per hour)	3.8E-10 1/h	
T_M (usage time)	20 years (EN ISO 13849) [1]	
Protection class	III (EN 61140)	
Protection type	Terminals: IP 20 (EN 60529) Housing: IP 40 (EN 60529)	
Ambient temperature during operation	-25 … +65°C	
Storage temperature	-25 … +70°C	
Humidity	10 to 95%, non-condensing	
Fatigue strength	5 … 150 Hz (EN 60068-2-6)	
Shock resistance • Continuous shock • Single shock	 10 g, 16 ms (EN 60068-2-29) 30 g, 11 ms (EN 60068-2-27)	
Operating elevation	No more than 2,000 m above sea level (80 kPa)	
Electromagnetic compatibility	Class A (EN 61000-6-2, EN 55011)	
Power consumption via internal safety bus without currents at X1, X2	max. 1.1 W	
Data interface	Internal safety bus	
Plug-in terminal blocks and connection data	**Screw terminal**	**Spring-loaded terminal**
Single-wire or fine-strand	1 x 0.2 … 2.5 mm^2 or 2 x 0.2 … 1.0 mm^2	2 x 0.2 … 1.5 mm^2
Fine-strand with ferrules as per EN 46228	1 × 0.25 … 2.5 mm^2 or 2 × 0.25 … 1.0 mm^2	2 × 0.25 … 1.5 mm^2
Conductor size AWG (use copper cables only)	26 … 14	24 … 16
Maximum tightening torque	0.5 … 0.6 Nm (5 … 7 lbf-in)	—
Stripping length	7 mm	
Dimensions (W × H × L)	22.5 × 96.5 × 121 mm	22.5 × 107 × 121 mm
Weight	164 g (± 5%)	164 g (± 5%)
Output supply (A1, A2)		
Supply voltage	24 V DC +25% / -30%	
Type of power supply	PELV or SELV The output voltage of the powerpack must be limited to ≤ 36 V DC in the event of an error (EN 61204-1: Chap. 3.17, up to class D). The output current of the powerpack must be limited to a maximum of 4 A – either by the powerpack itself or by a fuse.	
Power consumption	1W	

	SP-SDIO
Switch-on time	Max. 18 s
Short-circuit protective device	4 A gG (with tripping characteristic B or C)
Input circuit (I1–I8)	
Input voltage HIGH	13 to 30 V DC
Input voltage LOW	-5 to +5 V DC
Input current HIGH	2.4 to 3.8 mA
Input current LOW	-2.5 to 2.1 mA
Input reverse current with ground breakdown [2]	Max. 20 mA 1.5 kΩ effective reverse resistance for supply current
Input capacity	10 nF
Synchronous time	4 ms to 30 ms, configurable
Number of inputs	8
Test outputs (X1, X2)	
Number of outputs	2 (with 2 test signal generators)
Type of output	PNP semi-conductor, short-circuit-proof, short-circuit-monitored (configurable)
Output voltage HIGH	15 to 30 V DC (max. 1.8 V drop to terminal A1 on the controller module)
Output resistance LOW	22 Ω ± 10%, voltage limited at about 10 mA
Output current	Max. 120 mA at a test output (X1 or X2) Thus, a maximum of eight testable sensor cascades are possible per module with a maximum of 30 mA each. The total current of the samos® PRO system is limited to a maximum of 1.28 A. This corresponds, for example, to a maximum of 32 testable sensor cascades with 30 mA each plus 64 tactile sensors at the inputs of expansion modules with 5 mA each.
Test pulse rate (test period)	1 to 25 Hz, configurable
Test pulse duration (test gap)	1 to 100 ms, configurable
Load capacity	1 µF for test gap ≥ 4 ms 0.5 µF for test gap 1 ms
Line resistance	< 100 Ω
Safety outputs (Q1 to Q4)	
Number of outputs	4
Type of output	High-side MOSFET, short-circuit-proof
Output voltage HIGH	16 to 30 V DC (max. 0.8 V drop to terminal A1 on this module)
Leakage current LOW[3]	Max. 0.1 mA
Output current HIGH Max. overload current/duration	≤ 4.0 A ≤ 12 A / 8 ms
Output current	Max. 4.0 A

	SP-SDIO
Total current I_{tot} TU ≤ 45°C TU ≤ 55°C TU ≤ 65°C UL/CSA applications	 Max. 4.0 A Max. 3.2 A Max. 2.5 A Max. 3.2 A
Test pulse width[4]	< 650 µs or deactivated[5,6]
Test pulse rate	Max. 5 Hz
Load capacity	0.5 µF
Line resistance [7]	Max. 5 Ω (e.g. 100 m × 1.5 mm² = 1.2 Ω)
Maximum permissible coil energy without external protection elements[8] Hardware version V1.00 Hardware version V1.01	 0.22 J 0.37 J
Response time	Depends on logic setup (Details: *Response times for basic safety functions [ch. 12.1, p. 139]*)
Data interface	Internal safety bus

[1] For detailed information regarding the safety configuration of your machine/system, please contact the Wieland Electric branch in charge of your area.

[2] Do not connect any other safe inputs in parallel if the reverse current could lead to a HIGH state at the other input.

[3] In the event of a fault (interruption in the 0 V line), the maximum of the leakage current will flow in the OSSD line. The downstream control element must determine this state as being LOW. An FPLC (Failsafe Programmable Logic Controller) must be able to detect this state.

[4] When activated; in which case, the outputs are tested regularly (brief LOW switching). When selecting the downstream control elements, make sure that the test pulses will not cause switch-off with the previously listed parameters or deactivate the test pulses at the outputs.

[5] If safety outputs are being used without test pulses, either all of the safety outputs without test pulses must be switched off at least once a year simultaneously for at least one second or the samos® PRO system must be restarted by switching off the supply voltage.

[6] If safety outputs are being used without test pulses:
Use screened or separate cabling for the safety outputs for which the test pulses must have been deactivated, because a short-circuit to 24 V cannot be immediately detected if the output is HIGH. If an internal hardware error is detected, this could affect the ability to switch off the other outputs through reverse current.

[7] Limit the line resistance of the individual lines to the downstream control element to this value in order to ensure that a short-circuit will be reliably detected between the outputs. (Also see EN 60204, Safety of machinery - Electrical equipment of machines - Part 1: General requirements.)

[8] Examples of the resulting maximum coil induction:
HW V1.00: 1760 mH @ 0.5 A, 440 mH @ 1 A, 110 mH @ 2 A
HW V1.01: 2960 mH @ 0.5 A, 740 mH @ 1 A, 185 mH @ 2 A

12.5.3 Safe input expansion module

Tab. 80: SP-SDI data sheet

	SP-SDI	
Safety Integrity Level[1]	SIL3 (IEC 61508)	
Category	Category 4 (EN ISO 13849-1)	
Performance level [1]	PL e (EN ISO 13849-1)	
PFHd (average probability of a hazard-causing failure per hour)	4.5E-10 1/h	
T_M (usage time)	20 years (EN ISO 13849)	
Protection class	III (EN 61140)	
Protection type	Terminals: IP 20 (EN 60529) Housing: IP 40 (EN 60529)	
Ambient temperature during operation	-25 to +55°C	
Storage temperature	-25 to +70°C	
Humidity	10 to 95%, non-condensing	
Climatic conditions	55°C, 95% relative humidity (EN 61131-2)	
Fatigue strength	5 … 150 Hz (EN 60068-2-6)	
Shock resistance • Continuous shock • Single shock	 10 g, 16 ms (EN 60068-2-29) 30 g, 11 ms (EN 60068-2-27)	
Operating elevation	No more than 2,000 m above sea level (80 kPa)	
Electromagnetic compatibility	Class A (EN 61000-6-2, EN 55011)	
Power consumption via internal safety bus without currents at X1 ... X8	Max. 1.4 W	
Data interface	Internal safety bus	
Plug-in terminal blocks and connection data	**Screw terminal**	**Spring-loaded terminal**
Single-wire or fine-strand	1 x 0.2–2.5 mm² 2 x 0.2–1.0 mm²	2 x 0.2–1.5 mm²
Fine-strand with ferrules	1 × 0.25–2.5 mm² 2 × 0.25–1.0 mm²	2 × 0.25–1.5 mm²
Conductor size AWG (use copper cables only)	26-14	24-16
Maximum tightening torque	0.5–0.6 Nm (5–7 lbf-in)	—
Stripping length	7 mm	
Dimensions (W × H × L)	22.5 × 96.5 × 121 mm	22.5 × 107 × 121 mm
Weight	139 g (± 5%)	139 g (± 5%)
Input circuit (I1 to I8)		
Input voltage HIGH	13 to 30 V DC	
Input voltage LOW	-5 to +5 V DC	

	SP-SDI
Input current HIGH	2.4 to 3.8 mA
Input current LOW	-2.5 to 2.1 mA
Input reverse current with ground breakdown [2]	Max. 20 mA 1.5 kΩ effective reverse resistance for supply current
Input capacity	Max. 10 nF
Synchronous time	4 ms to 30 ms, configurable
Number of inputs	8
Test outputs (X1 to X8)	
Number of outputs	8 (with two test signal generators)
Type of output	PNP semi-conductor, short-circuit-proof, cross-connection-monitored
Output voltage	16 to 30 V DC
Output current	Max. 120 mA at both of the two test signal generators (X1/X3/X5/X7 or X2/X4/X6/X8) Thus, a maximum of eight testable sensor cascades are possible per module with a maximum of 30 mA each. The total current of the samos® PRO system is limited to a maximum of 1.28 A. This corresponds, for example, to 32 inputs of testable sensors with 30 mA and 64 inputs of SP-SDIO or SP-SDI modules.
Test pulse rate (test period)	1 to 25 Hz, configurable
Test pulse duration (test gap)	1 to 100 ms, configurable
Load capacity	1 µF for test gap ≥ 4 ms 0.5 µF for test gap 1 ms
Line resistance	< 100 Ω

[1] For detailed information regarding the safety configuration of your machine/system, please contact the Wieland Electric branch in charge of your area.

[2] Do not connect any other safe inputs in parallel when the reverse current could lead to a HIGH state at the other input.

12.5.4 Standard input/output expansion module

Tab. 81: SP-DIO data sheet

	SP-DIO
Protection class	III (EN 61140)
Protection type	Terminals: IP 20 (EN 60529) Housing: IP 40 (EN 60529)
Ambient temperature during operation	-25 … +55°C
Storage temperature	-40 … +70°C
Humidity	10 ... 95%, non-condensing
Fatigue strength	5 … 150 Hz (EN 60068-2-6)

	SP-DIO	
Shock resistance • Continuous shock • Single shock	 10 g, 16 ms (EN 60068-2-29) 30 g, 11 ms (EN 60068-2-27)	
Operating elevation	No more than 2,000 m above sea level (80 kPa)	
Electromagnetic compatibility	EN 61000 6 2, Class A (EN 55011) Emission EN 61000-6-4 Emission	
Power consumption via the internal safety bus	max. 0.5 W	
Data interface	Internal safety bus	
Plug-in terminal blocks and connection data	**Screw terminal**	**Spring-loaded terminal**
Single-wire or fine-strand	1 x 0.2–2.5 mm^2 2 x 0.2–1.0 mm^2	2 x 0.2–1.5 mm^2
Fine-strand with ferrules	1 × 0.25–2.5 mm^2 2 × 0.25–1.0 mm^2	2 × 0.25–1.5 mm^2
Conductor size AWG (use copper cables only)	26-14	24-16
Maximum tightening torque	0.5–0.6 Nm (5–7 lbf-in)	—
Stripping length	7 mm	
Dimensions (W × H × L)	22.5 × 96.5 × 121 mm	22.5 × 107 × 121 mm
Power supply (A1, A2)		
Supply voltage	24 V DC +25% / -30%	
Type of power supply	PELV or SELV The output voltage of the powerpack must be limited to ≤ 36 V DC in the event of an error (EN 61204-1: Chap. 3.17, up to class D).	
Power consumption	max. 120 W (depending on load)	
Switch-on time	max. 18 s	
Short-circuit protective device	4 A gG (tripping characteristic B or C)	
Input circuit (I1–I4 & IY5-IY8)		
Number of inputs	4 to max. 8 (depending on configuration)	
Input voltage HIGH	13 V DC… 30 V DC	
Input voltage LOW	–3 V DC … +5 V DC	
Input current HIGH	2 mA … 3.5 mA	
Input current LOW	0 mA… 1.0 mA	
Outputs (Y1-Y4 & IY5-IY8)		
Number of outputs	4 to max. 8 (depending on configuration)	
Type of output	High-side MOSFET, short-circuit-proof	
Output voltage	24 V DC +25% / -30%	
Output sum current I_{sum} max.	4 A	

	SP-DIO
Output current per output max.	0.5 A
Derating sum current I_{sum} TU ≤ 45°C TU ≤ 55°C TU ≤ 65°C	 Max. 4.0 A Max. 3.2 A Max. 2.5 A
Response time	Depending on logic setup (Details: *Response times for basic safety functions [ch. 12.1, p. 139]*)
Data interface	Internal safety bus

12.5.5 Safe relay extended module (not programmable)

Tab. 82: SA-OR data sheet

	SA-OR	
Protection type	IP 20	
Ambient temperature during operation	-25 to +55°C	
Storage temperature	-25 to +70°C	
Humidity	10 to 95%, non-condensing	
Fatigue strength	5 … 150 Hz (EN 60068-2-6)	
Shock resistance Continuous shock Single shock	 10 g, 16 ms (EN 60068-2-29) 30 g, 11 ms (EN 60068-2-27)	
Operating elevation	No more than 2,000 m above sea level (80 kPa)	
Electromagnetic compatibility	Class A (EN 61000-6-2, EN 55011)	
Power consumption per channel	1.1W	
Plug-in terminal blocks and connection data	**Screw terminal**	**Spring-loaded terminal**
Single-wire or fine-strand	1 x 0.2–2.5 mm² 2 x 0.2–1.0 mm²	2 x 0.2–1.5 mm²
Fine-strand with ferrules	1 × 0.25–2.5 mm² 2 × 0.25–1.0 mm²	2 × 0.25–1.5 mm²
Conductor size AWG (use copper cables only)	26-14	24-16
Maximum tightening torque	0.5–0.6 Nm (5–7 lbf-in)	—
Stripping length	7 mm	
Dimensions (W × H × L)	22.5 × 96.5 × 121 mm	22.5 × 107 × 121 mm
Weight	170 g (± 5%)	170 g (± 5%)
Input circuit (B1, B2)		
Number of inputs	1 or 2	
Input voltage	18 to 30 V	

	SA-OR
Input current	Type 45 mA
Outputs	
Number of outputs	2 or 4
Type of output	Positively driven contact
Output voltage	250 VAC
Output sum current Isum max.	72 A[2]
Output current per output max.	6 A
Derating sum current Isum TU ≤ 45°C TU ≤ 55°C TU ≤ 65°C	 72 A[2] 32 A[2] 16 A[2]
Response time	30 ms

12.5.6 Safe analog extended input modules

Tab. 83: Data sheet SP-SAC4, SP-SAR4, SP-SACR22

	SP-SAC4, SP-SAR4, SP-SACR22
SIL	3
PL	e
Category	Category 4 (EN ISO 13849-1)
T_M (usage time)	20 years (EN ISO 13849) [1]
Protection class	III (EN 61140)
Protection type	Terminals: IP 20 (EN 60529) Housing: IP 40 (EN 60529)
Ambient temperature during operation	-25 … +65°C
Storage temperature	-25 … +70°C
Humidity	10 to 95%, non-condensing
Fatigue strength	5 … 150 Hz, ±3.5 mm/1 g (EN 60068-2-6)
Shock resistance (single shock)	15 g, 11 ms (EN 60068-2-27)
Operating elevation	No more than 2,000 m above sea level (80 kPa)
Electromagnetic compatibility	Class A (EN 61000-6-2, EN 55011)
Power supply via SBUS	16.8 V – 30 V
Power consumption via the internal safety bus without consumers at X1 to X4	max. 1.0 W
Data interface	Internal safety bus
Maximum safety response time $t_{SR_Analog_IN}$ of analog module	104 ms
Galvanic isolation	Yes
Insulation voltage for A1/A2 supply	1500V

	SP-SAC4, SP-SAR4, SP-SACR22	
Plug-in terminal blocks and connection data	**Screw terminal**	**Spring-loaded terminal**
Single-wire or fine-strand	1 × 0.2 … 2.5 mm^2 or 2 × 0.2 … 1.0 mm^2	2 × 0.2 … 1.5 mm^2
Fine-strand with ferrules as per EN 46228	1 × 0.25 … 2.5 mm^2 or 2 × 0.25 … 1.0 mm^2	2 × 0.25 … 1.5 mm^2
Conductor size AWG (use copper cables only)	26 … 14	24 … 16
Maximum tightening torque	0.5 … 0.6 Nm (5 … 7 lbf-in)	—
Stripping length	7 mm	
Dimensions (W × H × L)	22.5 × 96.5 × 121 mm	22.5 × 107 × 121 mm
Weight	140 g (± 5%)	135 g (± 5%)
Input circuit (I1+, I1-, I2+, I2-, I3+, I3-, I4+, I4-)		
Input type	Current interface	
Signal type	0 – 20 mA / 4 – 20 mA	
Measurement range	0.1mA – 21mA / 3.6mA – 21mA	
Supported characteristic	Linear	
Resolution	1 uA	
Internal resistance / load	86 Ω	
Sampling rate	16 ms	
Error detection time Error diagnostic time	≤ 32 ms general error detection ≤ 400 ms error diagnosis	
Input filter	f=160 Hz prog. digital filter: f = 1/16 ms = 62.5 Hz f / x with x=1,2,4,8,16,32	
Accuracy	0.12% of measured value ± 1 uA	
Temperature influence	25 ppm/K	
Resolution	16 bit	
Number of inputs	4 (SP-SAC4), 2 (SP-SACR22)	
Input circuit (R12, R13, R22, R23, R32, R33, R42, R43)		
Input type	Temperature-dependent resistance (RTD)	
Sensor type	PT100 (measurement range -200 … +850 °C) Accuracy of 2/3/4-wire connection ± 0.25% / ± 0.05% / ± 0.05% of measurement range Within the limits of the max. line resistance Ambient temperature influence ** ppm / K	
	Pt200 (measurement range -200 … +850°C)	
	Pt500 (measurement range -200 … +850°C)	
	Pt1000 (measurement range -200 … +850°C)	
	Ni100 (measurement range -60 … +180 °C)	

	SP-SAC4, SP-SAR4, SP-SACR22
	Ni1000 (measurement range -60 … +180 °C)
Supported coefficients	PT100, PT200, PT500, PT1000: α=3851
	NI100, NI1000: α=618
Temperature resolution	0.1°C
Field current	PT100: 1000 uA (± 3%)
	PT200: 500 uA (± 3%)
	PT500: 250 uA (± 3%)
	PT1000: 100 uA (± 5%)
	NI100: 1000 uA (± 3%)
	NI1000: 100 uA (± 5%)
Connection type	Maximum line resistance 2-line circuit 15 Ω 3-line circuit 30 Ω 4-line circuit 30 Ω
Sampling rate	16 ms
Error detection time Error diagnostic time	≤ 16 ms general error detection ≤ 400 ms error diagnosis
Input filter	f=160 Hz prog. digital filter: f = 1/16 ms = 62.5 Hz f / x with x=1,2,4,8,16,32
Internal resolution	16 bit
Number of inputs	4 (SP-SAR4), 2 (SP-SACR22)
Sensor supply (X1, X2, X3, X4)	
Number of outputs	4 (SP-SAC4), 2 (SA-SACR22)
Type of output	regulated, short-circuit proof, short-circuit monitored, overcurrent monitoring > 100 mA
Output voltage	24 V DC / ± 5 % - regardless of input voltage at A1 and A2
Max. output resistance (total)	≥ 240 Ω
Output current (total)	Max. 100 mA (monitored)
Load capacity	22 µF
Response time	Depends on logic setup (Details: *Response times for basic safety functions [ch. 12.1, p. 139]*)
Data interface	Internal safety bus SBUS

[1] For detailed information regarding the safety configuration of your machine/system, please contact the Wieland Electric branch in charge of your area.

12.6 Dimensional drawings

12.6.1 Controller module

Screw terminal

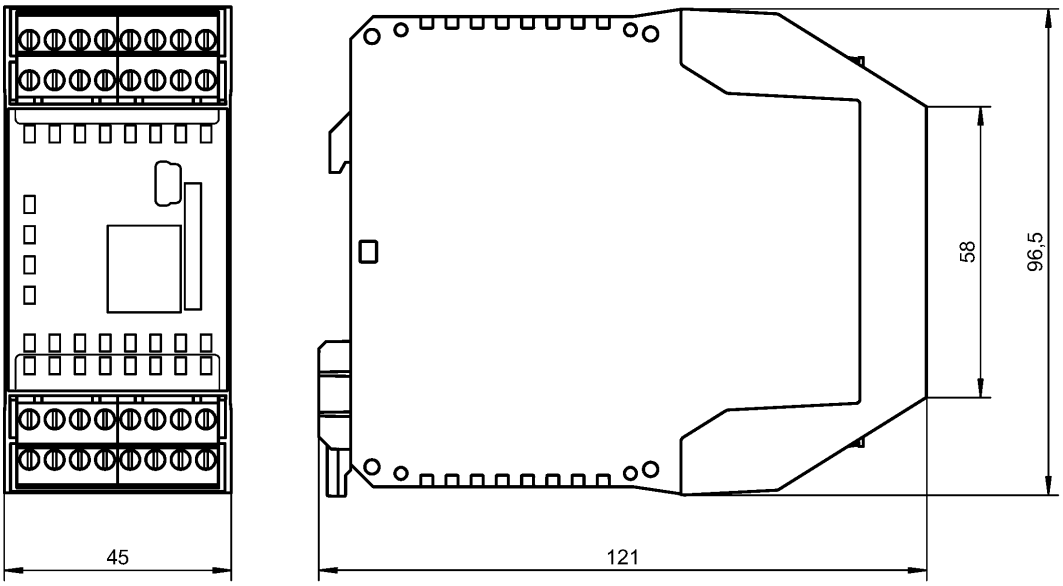

Spring-loaded terminal

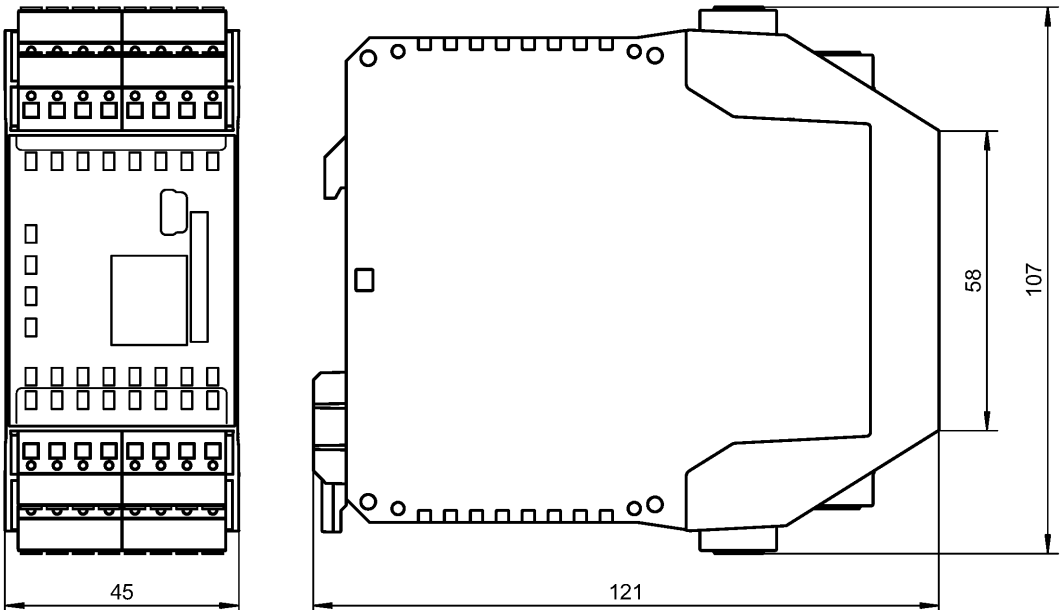

12.6.2 Input/output expansion modules

Screw terminal

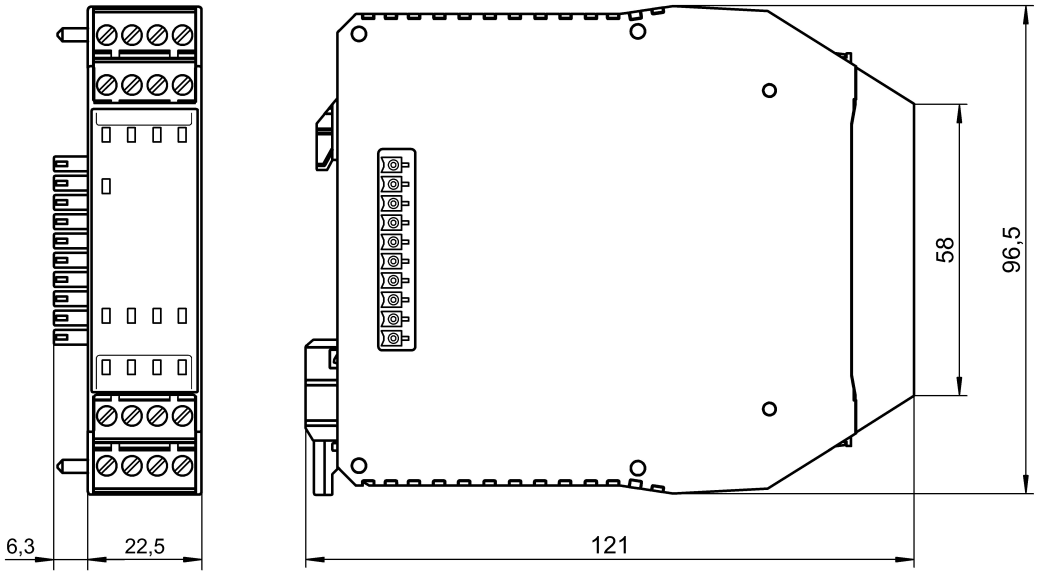

Spring-loaded terminal

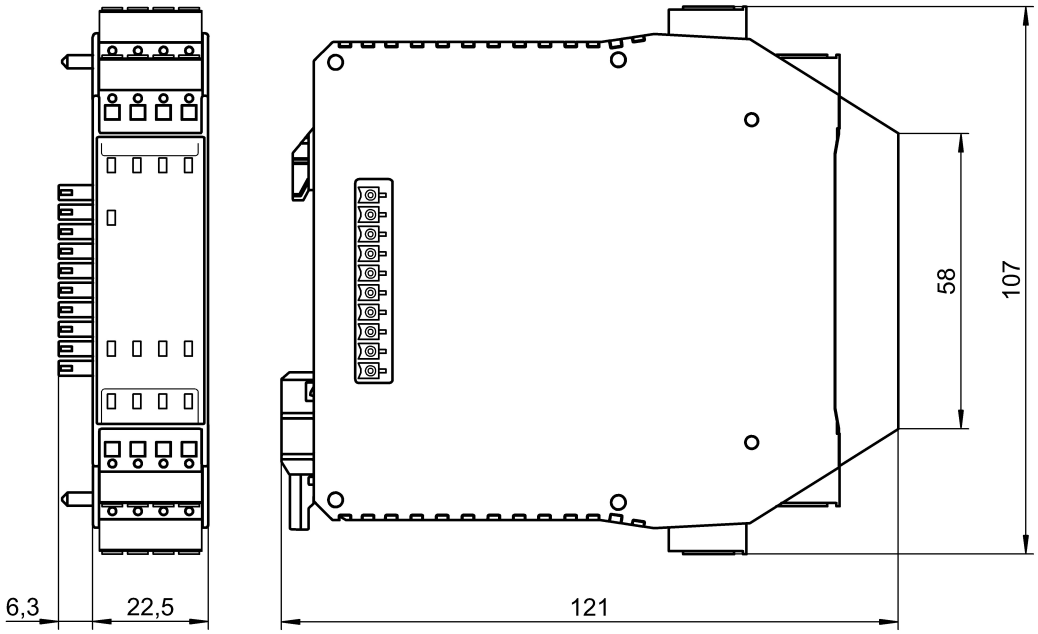

12.6.3 WKFN 2.5 E/35 GO-URL Level terminal

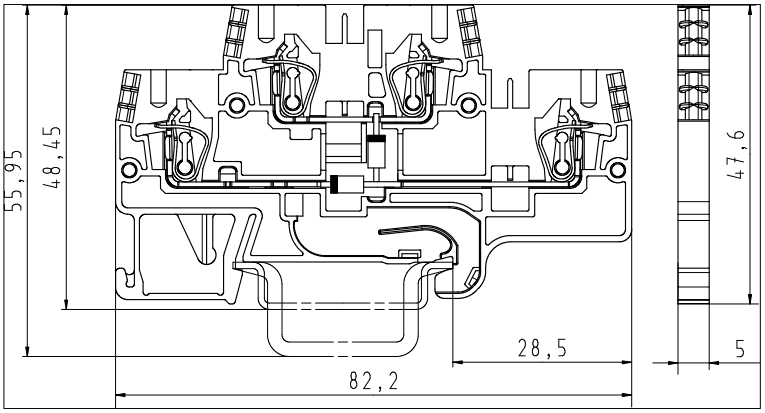

Fig. 43: WKFN 2.5 E/35 GO-URL dimensions (mm)

13 ORDER DATA

13.1 Hardware modules and accessories

Some order numbers are omitted with build status H-xx, see chapter "What's new?" in the hardware manual.

All new S variants (from build status H-xx onwards) as well as M and P variants contain the muting, press and analog functions.

Tab. 84: Order numbers of the samos® PRO module (SP-COP module)

Type from build status H-xx onwards	Type up to build status G-xx onwards	Description	Part number
-	SP-COP1-A	Controller module, COMPACT variant USB port, Up to G-xx: 20 inputs / 4 outputs Screw terminals, pluggable	R1.190.1110.0
-	SP-COP1-C	Controller module, COMPACT variant, USB port, Up to G-xx: 20 inputs / outputs Spring-loaded terminals, pluggable	R1.190.1120.0
-	SP-COP1-P-A	Controller module, COMPACT PLUS variant, USB port, 20 inputs / 4 outputs Screw terminals, pluggable	R1.190.1130.0
-	SP-COP1-P-C	Controller module, COMPACT PLUS variant, USB port, 20 inputs / 4 outputs Spring-loaded terminals, pluggable	R1.190.1140.0
-	SP-COP1-M-A	Controller module, MOTION variant, USB port, Up to G-xx: 20 inputs / outputs Screw terminals, pluggable	R1.190.1150.0
-	SP-COP1-M-C	Controller module, MOTION variant, USB port, Up to G-xx: 20 inputs / outputs Spring-loaded terminals, pluggable	R1.190.1160.0

Type from build status H-xx onwards	Type up to build status G-xx onwards	Description	Part number
SP-COP2-EN-A	SP-COP2-EN-A	Controller module, COMPACT variant, USB and Ethernet port, 16 inputs / 4 outputs and 4 configurable inputs or outputs Screw terminals, pluggable	R1.190.1210.0
SP-COP2-EN-C	SP-COP2-EN-C	Controller module, COMPACT variant, USB and Ethernet port, 16 inputs / 4 outputs and 4 configurable inputs or outputs Spring-loaded terminals, pluggable	R1.190.1220.0
-	SP-COP2-EN-P-A	Controller module, COMPACT PLUS variant, USB and Ethernet port, 16 inputs / 4 outputs and 4 configurable inputs or outputs Screw terminals, pluggable	R1.190.1230.0
-	SP-COP2-EN-P-C	Controller module, COMPACT PLUS variant, USB and Ethernet port, 16 inputs / 4 outputs and 4 configurable inputs or outputs Spring-loaded terminals, pluggable	R1.190.1240.0
SP-COP2-EN-M-A	-	Controller module, MOTION variant, USB and Ethernet port, 16 inputs / 4 outputs and 4 configurable inputs or outputs Screw terminals, pluggable	R1.190.1250.0
SP-COP2-EN-M-C	-	Controller module, MOTION variant, USB and Ethernet port, 16 inputs / 4 outputs and 4 configurable inputs or outputs Spring-loaded terminals, pluggable	R1.190.1260.0

Type from build status H-xx onwards	Type up to build status G-xx onwards	Description	Part number
SP-COP2-ENI-A	SP-COP2-ENI-A	Controller module, COMPACT variant, USB and industrial Ethernet port, 16 inputs / 4 outputs and 4 configurable inputs or outputs Screw terminals, pluggable	R1.190.1310.0
SP-COP2-ENI-C	SP-COP2-ENI-C	Controller module, COMPACT variant, USB and industrial Ethernet port, 16 inputs / 4 outputs and 4 configurable inputs or outputs Spring-loaded terminals, pluggable	R1.190.1320.0
-	SP-COP2-ENI-P-A	Controller module, COMPACT PLUS variant, USB and industrial Ethernet port, 16 inputs / 4 outputs and 4 configurable inputs or outputs Screw terminals, pluggable	R1.190.1330.0
-	SP-COP2-ENI-P-C	Controller module, COMPACT PLUS variant, USB and industrial Ethernet port, 16 inputs / 4 outputs and 4 configurable inputs or outputs Spring-loaded terminals, pluggable	R1.190.1340.0
SP-COP2-ENI-M-A	SP-COP2-ENI-M-A	Controller module, MOTION variant, USB and industrial Ethernet port, 16 inputs / 4 outputs and 4 configurable inputs or outputs Screw terminals, pluggable	R1.190.1350.0
SP-COP2-ENI-M-C	SP-COP2-ENI-M-C	Controller module, MOTION variant, USB and industrial Ethernet port, 16 inputs / 4 outputs and 4 configurable inputs or outputs Spring-loaded terminals, pluggable	R1.190.1360.0

Type from build status H-xx onwards	Type up to build status G-xx onwards	Description	Part number
SP-COP-STARTER-SET	SP-COP-STARTER-SET	From H-xx: Set consisting of one each of SP-COP2-ENI-A, SP-SDIO, SP-COP-CARD1, SP-PLAN6, SP-CABLE-USB1 Up to G-xx: Set consisting of one each of SP-COP2-EN-A, SP-SDIO, SP-COP-CARD1, SP-PLAN6, SP-CABLE-USB1	R1.190.1100.0
SP-COP-CARD1	SP-COP-CARD1	Program removable storage	R1.190.1000.0

Tab. 85: Order numbers of the samos® PRO module (further modules)

Type	Description	Part number
SP-CABLE-USB1	1.8 m USB configuration capable	R1.190.1010.0
SP-CABLE-ETH1	2 m Ethernet configuration capable	R1.190.1020.0
SP-PLAN6	CD with samos® PLAN 6 programming software and manuals	R1.190.1030.0
SP-CANopen	CANopen gateway Discontinued and replaced by R1.190.0xx.1	R1.190.0210.0
SP-CANopen	CANopen gateway	R1.190.0210.1
SP-PROFIBUS-DP	PROFIBUS-DP gateway Discontinued and replaced by R1.190.0xx.1	R1.190.0190.0
SP-PROFIBUS-DP	PROFIBUS-DP gateway	R1.190.0190.1
SP-EN-ETC	EtherCAT Gateway	R1.190.0160.0
SP-SDIO84-P1-K-A	Safe input/output expansion with output test pulses 8 inputs/4 outputs Screw terminals, pluggable	R1.190.0030.0
SP-SDIO84-P1-K-C	Safe input/output expansion with output test pulses 8 inputs/4 outputs Spring-loaded terminals, pluggable	R1.190.0040.0
SP-SDI8-P1-K-A	Safe input expansion 8 inputs Screw terminals, pluggable	R1.190.0050.0
SP-SDI8-P1-K-C	Safe input expansion 8 inputs Spring-loaded terminals, pluggable	R1.190.0060.0

Type	Description	Part number
SP-DIO84-P1-K-A	Standard input/output expansion 4 inputs / 4 outputs and 4 configurable inputs or outputs screw terminals, pluggable	R1.190.1050.0
SP-DIO84-P1-K-C	Standard input/output expansion 4 inputs / 4 outputs and 4 configurable inputs or outputs screw-loaded terminals, pluggable	R1.190.1060.0
SP-SAR4-A	Analog module, 4 safe RTD inputs, screw terminals, pluggable	R1.190.1610.0
SP-SAR4-C	Analog module, 4 safe RTD inputs, spring-loaded terminals, pluggable	R1.190.1620.0
SP-SAC4-A	Analog module, 4 safe 0-20mA inputs, screw terminals, pluggable	R1.190.1630.0
SP-SAC4-C	Analog module, 4 safe 0-20mA inputs, spring-loaded terminals, pluggable	R1.190.1640.0
SP-SACR22-A	Analog module, 2 safe RTD inputs, 2 safe 0-20mA inputs, screw terminals, pluggable	R1.190.1650.0
SP-SACR22-C	Analog module, 2 safe RTD inputs, 2 safe 0-20mA inputs, spring-loaded terminals, pluggable	R1.190.1660.0

13.2 Modules for contact expansion

Type	Description	Part number
SA-OR-S1-4RK-A	samos output module, 24 V DC, 2×2 enabling current paths, 2×2 signaling outputs, pluggable terminals screws	R1.180.0080.0
SA-OR-S1-4RK-C	samos output module, 24 V DC, 2×2 enabling current paths, 2×2 signaling outputs, pluggable spring-loaded terminal	R1.180.0430.0
SA-OR-S2-4RK-A	samos output module, 24 V DC, 1×2 enabling current paths, 1×2 signaling outputs, pluggable terminals screws	R1.180.0320.0
SA-OR-S2-4RK-C	samos output module, 24 V DC, 1×2 enabling current paths, 1×2 signaling outputs, pluggable spring-loaded terminal	R1.180.0440.0
SNE 1	Forcibly actuated single relay, 24 V DC, 2 changeovers, plug socket	R1.188.3950.0
SNE 4004K-A	Contact expansion, 24 V DC, 4 NC contacts, 3 NO contacts, Screw terminals, pluggable	R1.188.0590.0
SNE 4004K-C	Contact expansion, 24 V DC, 4 NC contacts, 3 NO contacts, Spring-loaded terminals, pluggable	R1.188.1980.0
SNE 4024K-A	Contact expansion with 2 relay groups, 24 V DC, 2 x 2 NC (normally closed contact), 2 x 1 NO (normally open contact), Screw terminals, pluggable	R1.188.3930.0
SNE 4024K-C	Contact expansion with 2 relay groups, 24 V DC, 2 x 2 NC (normally closed contact), 2 x 1 NO (normally open contact), Spring-loaded terminals, pluggable	R1.188.3940.0

13.3 Other safety-related products

Our extensive line of additional safety-related products can be found in our catalog entitled "Safety First" (part No. 0860.0) or online at www.wieland-electric.com.

14 APPENDIX

14.1 Declaration of Conformity

You can find the Declaration of Conformity on our website www.wieland-electric.com.

14.2 Checklist for manufacturers

The information in the following points must be available at least during first-time commissioning. It may vary depending on the application and the requirements from the manufacturer/supplier must be checked.

This checklist should be retained or stored with the machine documents so that it can be used as a reference during recurring tests.

NOTICE This checklist is not a replacement for the first-time commissioning or the regular testing done by a qualified person.

Tab. 86: Checklist for first-time commissioning

Question	Yes		No	
Were the safety guidelines according to the directives/standards valid for the machine used as a basis?	**Yes**	o	**No**	o
Are the directives and standards used listed in the Declaration of Conformity?	**Yes**	o	**No**	o
Does the safety equipment correspond to the required category?	**Yes**	o	**No**	o
Are the required protective measures against electric shock effective (protection class)?	**Yes**	o	**No**	o
Has the protective function been checked in accordance with the testing information in this documentation? In particular: • Functional check of the command devices, sensors, and actuators connected to the safety controller • Test of all switch-off paths	**Yes**	o	**No**	o
Have you ensured that a complete test of the safety functions has been carried out after every configuration change to the safety controller?	**Yes**	o	**No**	o

14.3 List of all error messages, causes and aids

Tab. 87: Controller module error messages

Error No.	Error type	Logbook message	System behavior	Remedy
00000001	Info	Log generator info function block	System continues to run	---
00000002	Warning	Log generator warning function block	System continues to run	---
00000003	Error	Log generator error function block	System continues to run	---
10100001	Error	An unknown error occurred.	Disconnection	Support request
10100002	Error	An internal error occurred.	Disconnection	Support request
10100003	Error	Time exceeded when preparing a message for the control.	No connection	Check connection

Error No.	Error type	Logbook message	System behavior	Remedy
10100004	Error	The value cannot be forced, because force mode is inactive.	Remains connected	Activate force mode
10100005	Error	The controller does not support the message type.	Disconnection	Support request
10100006	Error	The hash value of a read file is not valid.	Disconnection	Support request
10100007	Error	The header size in the message from the control is not plausible.	Disconnection	Support request
10100008	Error	The user data size in the message from the control is not plausible.	Disconnection	Support request
10100009	Error	The total data size does not match the number of received data.	Disconnection	Repeat Support request
1010000 A	Error	A data flow error in a segmented read message occurred.	No connection	Repeat Support request
1010000B	Error	The checksum in a message from the control is not valid.	Disconnection	Support request
1010000C	Error	Timeout when sending a message to the controller. Possible causes: There is already a communication link to the controller; The Ethernet or USB connection was interrupted.	Disconnection	Check connection support request
1010000D	Error	Timeout when receiving a message from the controller. Possible causes: There is already a communication link to the controller; The Ethernet or USB connection was interrupted.	Disconnection	Check connection support request
1010000E	Error	Unexpected message received.	Disconnection	Support request
1010000F	Error	The message from the control is corrupt.	Disconnection	Support request
10100010	Error	The message from the control is corrupt.	Disconnection	Support request
10100011	Error	The message to the control could not be processed.	Disconnection	Repeat Support request
10100012	Error	The control could not positively respond to the request.	Remains connected	Repeat Repair SD card Support request
10100013	Error	The number of request retries has been exceeded.	Disconnection	Repeat Support request
10100015	Error	Communication to the control could not be established.	No connection	Check connection support request
10100016	Error	The password is not valid for the user to be logged on.	Remains connected	Check password
10100017	Error	The control could not accept the desired state.	Remains connected	Repeat Support request
10100018	Error	The memory card of the station is not plugged in.	Disconnection	Insert valid SD card

Error No.	Error type	Logbook message	System behavior	Remedy
10200002	Error	The project on the control is invalid.	No connection	Transfer a new valid project
10200003	Error	The verification status of project and control is not the same.	No connection	Reverify the project
10200004	Error	The PC project and project on the control could not be synched.	No connection	Disconnect and reconnect support request
10200005	Error	The current user does not have authorization to communicate with the controller. Connection was disconnected.	No connection	Redefine the user rights
10200006	Warning	The project on the target does not match the module configuration.	Remains connected	Adjust hardware or project
10200007	Error	An error is reported by the control.	---	Support request
10200008	Error	The controller reports a different CRC of the project file.	---	Repeat of Support request work step
10200009	Error	The waiting time permitted for the project has been exceeded.	---	Repeat Support request
1020000 A	Info	The verification has been interrupted.	---	Repeat Support request
1020000B	Warning	The faulty project file is still in the station and must be replaced by the updated project file. Please reconnect and load the updated project on the station.	---	Update the device with the repaired project
10300001	Error	The logic analyzer data could not be saved.	---	Check Windows user privileges
10300002	Error	The logic analyzer data could not be loaded.	---	Repeat Support request
10300003	Error	Input/output was not found.	---	Support request
10400001	Error	The log messages could not be saved.	---	Check Windows user privileges
10400002	Error	The file contains more than 64 log messages. Only the first 64 were imported.	---	Reduce the number of log messages
10400003	Error	The log messages could not be imported.	---	Support request
10500001	Error	Login to control failed.	---	Repeat Support request
10600001	Error	This user already exists. Please select a different name.	---	Use another name
10600002	Error	Could not import user list.	---	Repeat Support request
10600003	Warning	The following users were not imported, since they already exist.	---	---

Error No.	Error type	Logbook message	System behavior	Remedy
10700001	Error	Project file could not be loaded. File format is not correct.	---	Search for a new program version: Main menu > via > Update, or support request
10700002	Error	Creating project from module configuration failed!	---	Search for a new program version: Main menu > via > Update, or support request
10700003	Error	Project file could not be saved!	---	Check Windows user privileges
10700004	Error	Project file could not be loaded. File format is not correct.	---	Search for a new program version: Main menu > via > Update, or support request
10700005	Error	Library file could not be loaded. File format is not correct.	---	Search for a new program version: Main menu > via > Update, or support request
10700006	Error	Faulty project structure.	---	Search for a new program version: Main menu > via > Update, or support request
10700008	Error	Setting data could not be loaded. Faulty file.	---	Search for a new program version: Main menu > via > Update, or support request
10700009	Error	Failed to import library, since corresponding elements already exist.	---	---
1070000 A	Error	File cannot be loaded, incorrect signature.	---	Search for a new program version: Main menu > via > Update, or support request
1070000B	Error	The gateway configuration could not be opened. The configuration is for a different gateway type.	---	---
1070000C	Error	The version of the project file is not supported by this program version.	---	Search for a new program version: Main menu > via > Update, or support request
1070000D	Error	The configuration data for a module could not be correctly loaded.	---	Search for a new program version: Main menu > via > Update, or support request
10800001	Warning	Forcing more than 10 values is not permitted.	---	---
11000000	Error	HTML help could not be found. Please check whether it was installed correctly.	---	Reinstall or repair the program, Support request
12000000	Error	The version information was incorrect. Please contact support.	---	Support request

Error No.	Error type	Logbook message	System behavior	Remedy
12000001	Error	No connection to the update server. Please check the Internet connection.	---	Check Internet connection
13000000	Error	The test gaps exceed half the maximum period.	---	Check the test parameters
13000001	Error	The test period exceeds the input's maximum test period.	---	Check the test parameters
13000002	Error	A test period with these minimum and maximum values cannot be configured.	---	Check the test parameters
13000003	Error	The test gaps exceed half the period.	---	Check the test parameters
13000004	Error	The required test parameters are not possible for at least one element on the module.	---	Check the test parameters
14000000	Error	Error in the logic configuration	---	Support request
14000001	Error	No enough space to insert elements on logic page.	---	Insert new logic page and reorganize function blocks
14000002	Warning	Elements could not be grouped.	---	---
14000003	Error	An element is only allowed for groupings.	---	---
14000004	Error	Maximum number of function blocks have already been created.	---	Simplify logic
14000005	Error	Failed to create residual memory.	---	Support request
14000006	Error	An element is not allowed for grouping.	---	---
14000007	Error	Function blocks are not compatible with the selected controller module.	---	If you use this controller module, the corresponding function blocks will be deleted.
14000008	Error	Selection cannot be grouped because there are more than 8 connections to inputs.	---	---
14000009	Error	Selection cannot be grouped because there are more than 8 connections to outputs.	---	---
1400000 A	Error	No functional blocks have been selected to group.	---	---
15000001	Error	CRC calculation failed	---	Repeat Support request
15000002	Error	Report generation failed	---	Repeat Support request
22010140	Warning	Error in system configuration	System continues to run	Reload system configuration
220101F5	Warning	Error in system configuration	Config required	Reload system configuration

Error No.	Error type	Logbook message	System behavior	Remedy
220101F6	Warning	Error in system configuration	Config required	Reload system configuration
220101F7	Warning	Error in system configuration	Config required	Reload system configuration
220101F8	Warning	Error in system configuration	Config required	Reload system configuration
220101F9	Warning	Error in system configuration	Config required	Reload system configuration
220101FA	Warning	Error in system configuration	Config required	Reload system configuration
220101FC	Warning	Error in system configuration	Config required	Reload system configuration
22010226	Warning	Error in system configuration	Config required	Reload system configuration
22010227	Warning	Error in system configuration	Config required	Reload system configuration
22010228	Warning	Error in system configuration	Config required	Reload system configuration
22010231	Warning	Pulse period 0 must have pulse length 0.	Configuration required	Change system configuration and reload
22010232	Warning	Pulse length must be <= pulse period/2.	Configuration required	Change system configuration and reload
22010233	Warning	Impermissible test period (permissible: 0,40,200,400,600,800,1000).	Config required	Change system configuration and reload
22010234	Warning	Pulse length must be 4..100ms in increments of 4ms	Configuration required	Change system configuration and reload
22010240	Warning	Maximum function block count or mapping exceeded	Configuration required	Change system configuration and reload
22010241	Warning	There is not an appropriate number of I/O modules for the project	Configuration required	Change system configuration and reload
22010242	Warning	There is not an appropriate number of gateway modules for the project.	Configuration required	Change system configuration and reload
22010244	Warning	The type or major version of the I/O module is inappropriate for the project	Configuration required	Change system configuration and reload
22010245	Warning	The type or major version of the gateway module is inappropriate for the project	Configuration required	Change system configuration and reload
22010246	Warning	Version of analog module does not match the version of head module	Configuration required	Change system configuration and reload
2201024C	Warning	The Analog FBs are not supported by this device version	Configuration required	Change system configuration and reload
2201024D	Warning	Standstill "Lite" is no longer supported by this device version	Configuration required	Change system configuration and reload
2201024E	Warning	The Motion FBs of module version E are no longer supported by this device version	Configuration required	Change system configuration and reload

Error No.	Error type	Logbook message	System behavior	Remedy
2201024F	Warning	The Motion FBs are not supported by this device version	Configuration required	Change system configuration and reload
22010250	Warning	The press function components are not supported by this device version	Configuration required	Change system configuration and reload
22010348	Warning	Internal error	Configuration required	Change system configuration and reload
22010349	Warning	Unknown sensor type	Configuration required	Change system configuration and reload
2201034 A	Warning	Sensor types 1/2 have different units	Configuration required	Change system configuration and reload
2201034B	Warning	Internal error	Configuration required	Change system configuration and reload
2201034C	Warning	Limit time for bypass exceeded	Configuration required	Change system configuration and reload
2201034D	Warning	Lower limit not less than upper limit	Configuration required	Change system configuration and reload
2201034E	Warning	Limit value with hysteresis is greater than the scope of application	Configuration required	Change system configuration and reload
2201034F	Warning	Comparison result is unknown	Configuration required	Change system configuration and reload
22010350	Warning	Absolute value outside the scope of application	Configuration required	Change system configuration and reload
22010351	Warning	Tolerance time > 60000ms	Configuration required	Change system configuration and reload
22010352	Warning	Relative value > 100%	Configuration required	Change system configuration and reload
22010353	Warning	Internal error	Configuration required	Change system configuration and reload
22010354	Warning	Sensor types 3/4 have different units	Configuration required	Change system configuration and reload
22010355	Warning	Comparison function is unknown	Configuration required	Change system configuration and reload
22010356	Warning	Internal error	Configuration required	Change system configuration and reload
22010357	Warning	Limit time for bypass exceeded	Configuration required	Change system configuration and reload
22011243	Warning	Incorrect device name or safety category of the module	Configuration required	Change system configuration and reload
22012243	Warning	Incorrect module type	Configuration required	Change system configuration and reload
22013243	Warning	Incorrect number of inputs	Configuration required	Change system configuration and reload
22014243	Warning	Incorrect number of outputs	Configuration required	Change system configuration and reload
22015243	Warning	Incorrect manufacturer	Configuration required	Change system configuration and reload

Error No.	Error type	Logbook message	System behavior	Remedy
22016243	Warning	Software version not supported	Configuration required	Change system configuration and reload
22017243	Warning	Software identification 'V' not found	Configuration required	Change system configuration and reload
2201xxxx	Warning	Error in the configuration	Configuration required	Change system configuration and reload
23010001	Warning	Sequence error at I1/I2	System continues to run	---
23010003	Warning	Sequence error at I3/I4	System continues to run	---
23010005	Warning	Sequence error at I5/I6	System continues to run	---
23010007	Warning	Sequence error at I7/I8	System continues to run	---
23010009	Warning	Sequence error at I9/I10	System continues to run	---
2301000B	Warning	Sequence error at I11/I12	System continues to run	---
2301000D	Warning	Sequence error at I13/I14	System continues to run	---
2301000F	Warning	Sequence error at I15/I16	System continues to run	---
23010011	Warning	Sequence error at IQ1/IQ2	System continues to run	---
23010013	Warning	Sequence error at IQ3/IQ4	System continues to run	---
2301xxxx	Warning	Sequence error at 2-channel input	System continues to run	---
23020001	Warning	Synchronization time error I1/I2	System continues to run	---
23020003	Warning	Synchronization time error I3/I4	System continues to run	---
23020005	Warning	Synchronization time error I5/I6	System continues to run	---
23020007	Warning	Synchronization time error I7/I8	System continues to run	---
23020009	Warning	Synchronization time error I9/I10	System continues to run	---
2302000B	Warning	Synchronization time error I11/I12	System continues to run	---
2302000D	Warning	Synchronization time error I13/I14	System continues to run	---
2302000F	Warning	Synchronization time error I15/I16	System continues to run	---
23020011	Warning	Synchronization time error IQ1/IQ2	System continues to run	---

Error No.	Error type	Logbook message	System behavior	Remedy
23020013	Warning	Synchronization time error IQ3/IQ4	System continues to run	---
2302xxxx	Warning	Synchronization time error at 2-channel input	System continues to run	---
23100100	Info	Sensor error rectified	System continues to run	---
23100201	Warning	Stuck-at at I13 .. I16	System continues to run	Check motion sensor
23100204	Warning	EMC malfunction	System continues to run	Check EMC environment, check sensor wiring, following wiring instructions, support request
23100205	Warning	EMC malfunction	System continues to run	Check EMC environment, following wiring instructions, support request
23100207	Warning	Error in system configuration	System continues to run	Change system configuration and reload
23100211	Warning	Frequency at I13 too high	System continues to run	Check motion sensor
23100212	Warning	Frequency at I14 too high	System continues to run	Check motion sensor
23100214	Warning	Frequency at I15 too high	System continues to run	Check motion sensor
23100218	Warning	Frequency at I16 too high	System continues to run	Check motion sensor
2310021x	Warning	Sensor frequency too high	System continues to run	Check motion sensor
23100221	Warning	Phase error on sensor 1	System continues to run	Check motion sensor
23100222	Warning	Phase error on sensor 2	System continues to run	Check motion sensor
2310022x	Warning	Phase error, sensor signals A B	System continues to run	Check motion sensor
23100231	Warning	Error of inverted sensor signal at I13/I14	System continues to run	Check motion sensor
23100232	Warning	Error of inverted sensor signal at I13/I15	System continues to run	Check motion sensor
23100234	Warning	Error of inverted sensor signal at I14/I16	System continues to run	Check motion sensor
23100238	Warning	Error of inverted sensor signal at I15/I16	System continues to run	Check motion sensor
2310023x	Warning	Error of inverted sensor signals	System continues to run	Check motion sensor
23100241	Warning	Frequency difference of individual channels, sensor 1	System continues to run	Check motion sensor

Error No.	Error type	Logbook message	System behavior	Remedy
23100242	Warning	Frequency difference of individual channels, sensor 2	System continues to run	Check motion sensor
2310024x	Warning	Frequency difference of individual channels on multichannel sensor	System continues to run	Check motion sensor
2310025x	Warning	EMC malfunction	System continues to run	Check EMC environment, following wiring instructions, support request
2310026x	Warning	Interruption at push/pull sensor output	System continues to run	Check motion sensor
23100270	Warning	EMC malfunction	System continues to run	Check EMC environment, following wiring instructions, support request
23100271	Warning	EMC malfunction	System continues to run	Check EMC environment, following wiring instructions, support request
2310030x	Warning	Stuck-at-low at I13 or I14	System continues to run	Check motion sensor
231003x0	Warning	Stuck-at-low at I15 or I16	System continues to run	Check motion sensor
23100401	Warning	Maximum position value exceeded	System continues to run	Check motion sensor
23100403	Warning	Maximum speed exceeded	System continues to run	Check motion sensor
23100404	Warning	No valid information on rotational direction	System continues to run	Check motion sensor
23100405	Warning	Speed comparison outside of limit	System continues to run	Check motion sensor
23100406	Warning	Position comparison outside limit	System continues to run	Check motion sensor
23100407	Warning	Error in system configuration	System continues to run	Change system configuration and reload
23100408	Warning	Maximum position exceeded	System continues to run	Check motion sensor
23100409	Warning	Minimum position undershot	System continues to run	Check motion sensor
2310040 A	Info	Reset required (activation of the vibration filter at a standstill)	System continues to run	When activating from a standstill, the drive stop signal must be confirmed by a reset.
23100501	Info	No sensor signal	System continues to run	Check motion sensor
2310060x	Warning	Stuck-at at I13 or I14	System continues to run	Check motion sensor

Error No.	Error type	Logbook message	System behavior	Remedy
231006x0	Warning	Stuck-at at I15 or I16	System continues to run	Check motion sensor
23200100	Info	Sensor error rectified	System continues to run	Check the analog sensor
23200801	Warning	Analog sensor warning	System continues to run	Check the analog sensor
23200810	Warning	Tolerance error in duel-channel monitoring system	System continues to run	Check the analog sensor
23200C00	Warning	Analog sensor error	System continues to run	Check the analog sensor
2320xxxx	Warning	Analog sensor error	System continues to run	Check the analog sensor
240A0000	Warning	Output error at Q1	System continues to run; affected outputs switch off	Check outputs
240A0001	Warning	Output error at Q2	System continues to run; affected outputs switch off	Check outputs
240A0002	Warning	Output error at Q3	System continues to run; affected outputs switch off	Check outputs
240A0003	Warning	Output error at Q4	System continues to run; affected outputs switch off	Check outputs
240A0004	Warning	Output error at IQ1	System continues to run; affected outputs switch off	Check outputs
240A0005	Warning	Output error at IQ2	System continues to run; affected outputs switch off	Check outputs
240A0006	Warning	Output error at IQ3	System continues to run; affected outputs switch off	Check outputs
240A0007	Warning	Output error at IQ4	System continues to run; affected outputs switch off	Check outputs
240A0008	Warning	Output error at group Q1/Q2	System continues to run; affected outputs switch off	Check outputs
240A0009	Warning	Output error at group Q3/Q4	System continues to run; affected outputs switch off	Check outputs
240A000A	Warning	Output error at group IQ1/IQ2	System continues to run; affected outputs switch off	Check outputs
240A000B	Warning	Output error at group IQ3/IQ4	System continues to run; affected outputs switch off	Check outputs

Error No.	Error type	Logbook message	System behavior	Remedy
240Axxxx	Error	Output error	System stop	Check outputs
240B0001	Info	Output error at Q1/Q2 rectified	System continues to run	---
240B0002	Info	Output error at Q3/Q4 rectified	System continues to run	---
240B0003	Info	Output error at IQ1/IQ2 rectified	System continues to run	---
240B0004	Info	Output error at IQ3/IQ4 rectified	System continues to run	---
240Bxxxx	Info	Output error rectified	System continues to run	---
240Dxxxx	Error	Error in system configuration	System stop	Reload system configuration and restart
240Exxxx	Warning	Problem with force mode	System continues to run	Restart forcing
240Fxxxx	Warning	Problem with force mode	System continues to run	Restart forcing
2410xxxx	Warning	Problem with force mode	System continues to run	Restart forcing
2411xxxx	Warning	Problem with force mode	System continues to run	Restart forcing
2412xxxx	Warning	Problem with force mode	System continues to run	Restart forcing
2413xxxx	Warning	Problem with force mode	System continues to run	Restart forcing
2414xxxx	Warning	Problem with force mode	System continues to run	Restart forcing
2415xxxx	Warning	Problem with force mode	System continues to run	Restart forcing
2416xxxx	Warning	Connection problem	System stop	Restart
2417xxxx	Warning	Force mode time expired	System continues to run	---
2418xxxx	Error	Internal error	System stop	Restart or make complaint
2419xxxx	Warning	Error in system configuration.	System continues to run	Reload system configuration
241Axxxx	Warning	Output error	System continues to run	Check outputs
241B0001	Warning	Stuck-at-high at Q1	System continues to run	Check outputs
241B0002	Warning	Stuck-at-high at Q2	System continues to run	Check outputs
241B0003	Warning	Stuck-at-high at Q3	System continues to run	Check outputs

Error No.	Error type	Logbook message	System behavior	Remedy
241B0004	Warning	Stuck-at-high at Q4	System continues to run	Check outputs
241B0005	Warning	Stuck-at-high at IQ1	System continues to run	Check outputs
241B0006	Warning	Stuck-at-high at IQ2	System continues to run	Check outputs
241B0007	Warning	Stuck-at-high at IQ3	System continues to run	Check outputs
241B0008	Warning	Stuck-at-high at IQ4	System continues to run	Check outputs
241Bxxxx	Warning	Output error	System continues to run	Check outputs
241D0001	Warning	Test pulse error at I1	System continues to run	Check cabling
241D0002	Warning	Test pulse error at I2	System continues to run	Check cabling
241D0003	Warning	Test pulse error at I3	System continues to run	Check cabling
241D0004	Warning	Test pulse error at I4	System continues to run	Check cabling
241D0005	Warning	Test pulse error at I5	System continues to run	Check cabling
241D0006	Warning	Test pulse error at I6	System continues to run	Check cabling
241D0007	Warning	Test pulse error at I7	System continues to run	Check cabling
241D0008	Warning	Test pulse error at I8	System continues to run	Check cabling
241D0009	Warning	Test pulse error at I9	System continues to run	Check cabling
241D000A	Warning	Test pulse error at I10	System continues to run	Check cabling
241D000B	Warning	Test pulse error at I11	System continues to run	Check cabling
241D000C	Warning	Test pulse error at I12	System continues to run	Check cabling
241D000D	Warning	Test pulse error at I13	System continues to run	Check cabling
241D000E	Warning	Test pulse error at I14	System continues to run	Check cabling
241D000F	Warning	Test pulse error at I15	System continues to run	Check cabling
241D0010	Warning	Test pulse error at I16	System continues to run	Check cabling
241D0011	Warning	Test pulse error at IQ1	System continues to run	Check cabling

Error No.	Error type	Logbook message	System behavior	Remedy
241D0012	Warning	Test pulse error at IQ2	System continues to run	Check cabling
241D0013	Warning	Test pulse error at IQ3	System continues to run	Check cabling
241D0014	Warning	Test pulse error at IQ4	System continues to run	Check cabling
241Dxxxx	Warning	Check of test pulses returned an error	System continues to run	Check cabling
241Exxxx	Warning	Verification of project failed	System continues to run	Re-verification
241Fxxxx	Warning	Verification of project failed	System continues to run	Re-verification
2420xxxx	Warning	Verification of project failed	System continues to run	Re-verification
2421xxxx	Warning	Verification of project failed	System continues to run	Re-verification
2422xxxx	Warning	Verification of project failed	System continues to run	Re-verification
2423xxxx	Info	The verified project on the SD card has changed	System continues to run	---
2433xxxx	Warning	Problem during fast shut-off	System continues to run	---
2435Fx00	Warning	Safety mat cable break	System continues to run	Check cabling
2435Fx02	Warning	Safety mat cable break	System continues to run	Check cabling
2435Fx04	Warning	Safety mat cable break	System continues to run	Check cabling
2435Fx06	Warning	Safety mat cable break	System continues to run	Check cabling
2435Fx08	Warning	Safety mat cable break	System continues to run	Check cabling
2435Fx0A	Warning	Safety mat cable break	System continues to run	Check cabling
2435Fx0C	Warning	Safety mat cable break	System continues to run	Check cabling
2435Fx0E	Warning	Safety mat cable break	System continues to run	Check cabling
2435Fx10	Warning	Safety mat cable break	System continues to run	Check cabling
2435Fx12	Warning	Safety mat cable break	System continues to run	Check cabling
2435Fxxx	Warning	Safety mat cable break	System continues to run	Check cabling
2435xxxx	Warning	Safety mat cable break	System continues to run	Check cabling

Error No.	Error type	Logbook message	System behavior	Remedy
2436xxxx	Warning	Check of a safety feature	System continues to run	Unverification of project
2437xxxx	Warning	Check of a safety feature	System continues to run	Reduce the number of forced inputs to less than or equal to 10
2438xxxx	Warning	Configuration data faulty	System continues to run	Modify project data or make complaint
2439xxxx	Error	The configuration changed during execution of the application	System stop	Restart or make complaint
243Bxxxx	Warning	Configuration data faulty	System continues to run	Modify project data or make complaint
243CFx00	Warning	Stuck-at-high safety mat at I1	System continues to run	Check cabling
243CFx01	Warning	Stuck-at-high safety mat at I2	System continues to run	Check cabling
243CFx02	Warning	Stuck-at-high safety mat at I3	System continues to run	Check cabling
243CFx03	Warning	Stuck-at-high safety mat at I4	System continues to run	Check cabling
243CFx04	Warning	Stuck-at-high safety mat at I5	System continues to run	Check cabling
243CFx05	Warning	Stuck-at-high safety mat at I6	System continues to run	Check cabling
243CFx06	Warning	Stuck-at-high safety mat at I7	System continues to run	Check cabling
243CFx07	Warning	Stuck-at-high safety mat at I8	System continues to run	Check cabling
243CFx08	Warning	Stuck-at-high safety mat at I9	System continues to run	Check cabling
243CFx09	Warning	Stuck-at-high safety mat at I10	System continues to run	Check cabling
243CFx0A	Warning	Stuck-at-high safety mat at I11	System continues to run	Check cabling
243CFx0B	Warning	Stuck-at-high safety mat at I12	System continues to run	Check cabling
243CFx0C	Warning	Stuck-at-high safety mat at I13	System continues to run	Check cabling
243CFx0D	Warning	Stuck-at-high safety mat at I14	System continues to run	Check cabling
243CFx0E	Warning	Stuck-at-high safety mat at I15	System continues to run	Check cabling
243CFx0F	Warning	Stuck-at-high safety mat at I16	System continues to run	Check cabling
243CFx10	Warning	Stuck-at-high safety mat at IQ1	System continues to run	Check cabling

Error No.	Error type	Logbook message	System behavior	Remedy
243CFx11	Warning	Stuck-at-high safety mat at IQ2	System continues to run	Check cabling
243CFx12	Warning	Stuck-at-high safety mat at IQ3	System continues to run	Check cabling
243CFx13	Warning	Stuck-at-high safety mat at IQ4	System continues to run	Check cabling
243CFxxx	Warning	Stuck-at-high safety mat	System continues to run	Check cabling
243D0012	Warning	Error in system configuration	Config required	Reload system configuration
243D0034	Warning	Error in system configuration	Config required	Reload system configuration
243Fxxxx	Warning	Error in system configuration	Config required	Reload system configuration
24400000	Error	Internal error	System stop	Replace the device
2441xxxx	Error	Internal error	System stop	Replace the device
24420000	Warning	Error in system configuration	---	---
2443000x	Warning	Input I13-I16 only for motion sensors	Configuration required	Reload system configuration
24440000	Warning	Phase error A/B	System continues to run	Check AB phase sequence: 200us minimum distance!
2445xxxx	Error	Internal error	System stop	Avoid high-frequency signals at I13-I16 during power-up, otherwise replace the device
250100x1	Warning	Power supply A1 too low	System continues to run	Supply voltage must be set correctly
250100x2	Warning	Power supply B1 too low	System continues to run	Supply voltage must be set correctly
250100x3	Warning	Power supply B2 too low	System continues to run	Supply voltage must be set correctly
2501xxxx	Warning	Power supply too low	System continues to run	Supply voltage must be set correctly
250200x1	Warning	Power supply A1 too high	System continues to run	Supply voltage must be set correctly
250200x2	Warning	Power supply B1 too high	System continues to run	Supply voltage must be set correctly
250200x3	Warning	Power supply B2 too high	System continues to run	Supply voltage must be set correctly
2502xxxx	Warning	Power supply too high	System continues to run	Supply voltage must be set correctly
2503xxx1	Error	Power supply A1 too low	System stop	Supply voltage must be set correctly

Error No.	Error type	Logbook message	System behavior	Remedy
2504xxx1	Error	Power supply A1 too high	System stop	Supply voltage must be set correctly
2504xxx2	Error	Power supply B1 too high	System stop	Supply voltage must be set correctly
2504xxx3	Error	Power supply B2 too high	System stop	Supply voltage must be set correctly
2504xxxx	Error	Power supply too high	System stop	Supply voltage must be set correctly
250500x1	Info	Supply voltage A1 within normal range	System continues to run	---
250500x2	Info	Supply voltage B1 within normal range	System continues to run	---
250500x3	Info	Supply voltage B2 within normal range	System continues to run	---
2505xxxx	Info	Supply voltage within normal range	System continues to run	---
250900x1	Warning	Overcurrent at output group Q1/Q2	System continues to run	Check load current
250900x2	Warning	Overcurrent at output group Q3/Q4	System continues to run	Check load current
250900x3	Warning	Overcurrent at output group IQ1/IQ2	System continues to run	Check load current
250900x4	Warning	Overcurrent at output group IQ3/IQ4	System continues to run	Check load current
2509xxxx	Warning	Overcurrent at output	System continues to run	Check load current
250Axxxx	Error	Power supply at A1 too high	System stop	Check voltage at A1
250Bxxxx	Error	Power supply at A1 too high	System stop	Check voltage at A1
2604xxxx	Warning	Internal/external S-bus error	System continues to run	Reduce the number of expansion modules
2609xxxx	Warning	Error in system configuration	System continues to run	Reload system configuration
260Axxxx	Warning	Error in system configuration	System continues to run	Reload system configuration
260Bxxxx	Error	Too many expansion modules plugged in	System stop	Check connection of modules
260Cxxxx	Error	Error from an I/O module	System stop	Check connection of modules
2733xxxx	Warning	Input discrepancy rectified	System continues to run	---
28020000	Info	Values were changed	System continues to run	---
2805xxxx	Warning	Communication interrupted	System continues to run	Restart or make complaint
2808xxxx	Warning	No SD card	Configuration required	Insert SD card

Error No.	Error type	Logbook message	System behavior	Remedy
2809xxxx	Warning	Action not permitted	System continues to run	Execute correct action
280Axxxx	Warning	Ethernet connection too slow	System continues to run	---
2B0Exxxx	Warning	Time for logic processing exceeded	System continues to run	---
2Bxxxxxx	Warning	Internal error	System continues to run	---
3409xxxx	Warning	Invalid force request	System continues to run	---
340Axxxx	Warning	Invalid trace request	System continues to run	---
34290003	Warning	Synchronization time error I1/I2	System continues to run	---
3429000C	Warning	Synchronization time error I3/I4	System continues to run	---
34290030	Warning	Synchronization time error I5/I6	System continues to run	---
342900C0	Warning	Synchronization time error I7/I8	System continues to run	---
3429xxxx	Warning	Dual-channel synchronization time error	System continues to run	---
342A0003	Warning	Sequence error at I1/I2	System continues to run	---
342A000C	Warning	Sequence error at I3/I4	System continues to run	---
342A0030	Warning	Sequence error at I5/I6	System continues to run	---
342A00C0	Warning	Sequence error at I7/I8	System continues to run	---
342Axxxx	Warning	Sequence error at 2-channel input	System continues to run	---
36010001	Warning	External test pulse error at I1	System continues to run	---
36010002	Warning	External test pulse error at I2	System continues to run	---
36010004	Warning	External test pulse error at I3	System continues to run	---
36010008	Warning	External test pulse error at I4	System continues to run	---
36010010	Warning	External test pulse error at I5	System continues to run	---
36010020	Warning	External test pulse error at I6	System continues to run	---
36010040	Warning	External test pulse error at I7	System continues to run	---

Error No.	Error type	Logbook message	System behavior	Remedy
36010080	Warning	External test pulse error at I8	System continues to run	---
3601xxxx	Warning	Error at external input test pulse	System continues to run	---
3602xxxx	Warning	Safety mat cable break	System continues to run	---
3702xxxx	Warning	Short circuit, stuck-at-low, VCC or GND break	System continues to run	---
37040003	Warning	Cross-point fault at Q1/Q2	System continues to run	---
3704000C	Warning	Cross-point fault at Q3/Q4	System continues to run	---
3704xxxx	Warning	Cross-point fault at the output	System continues to run	---
37050001	Warning	Stuck-at-high at Q1	System continues to run	---
37050002	Warning	Stuck-at-high at Q2	System continues to run	---
37050004	Warning	Stuck-at-high at Q3	System continues to run	---
37050008	Warning	Stuck-at-high at Q4	System continues to run	---
3705xxxx	Warning	Stuck-at-high at the output	System continues to run	---
3801xxxx	Error	Power supply error (logic voltage)	System stop; voltage OFF-ON required	---
3802xxxx	Error	Power pack monitoring	System stop; voltage OFF-ON required	---
3803xxxx	Error	Output voltage error	System stop; voltage OFF-ON required	---
3806xxxx	Warning	GND break at A1 and A2	System continues to run	---
3807xxxx	Warning	Power supply A1 too low	System continues to run	---
3902xxxx	Warning	Error in system configuration	System continues to run	---
3903xxxx	Warning	Error in system configuration	System continues to run	---
3904xxxx	Warning	Error in system configuration	System continues to run	---
3905xxxx	Warning	Invalid value for synchronous time	System continues to run	Configure synchronous time with value 0 or a whole-number multiple of 4 ms
3906xxxx	Warning	Error in system configuration	System continues to run	---

Error No.	Error type	Logbook message	System behavior	Remedy
3907xxxx	Warning	Error in system configuration	System continues to run	---
3908xxxx	Warning	Error in system configuration	System continues to run	---
3909xxxx	Warning	Error in system configuration	System continues to run	---
390Axxxx	Warning	Error in system configuration	System continues to run	---
390Bxxxx	Warning	Error in system configuration	System continues to run	---
390Cxxxx	Warning	Error in system configuration	System continues to run	---
390Dxxxx	Warning	Error in system configuration	System continues to run	---
390Exxxx	Warning	Error in system configuration	System continues to run	---
390Fxxxx	Warning	Error in system configuration	System continues to run	---
3910xxxx	Warning	Error in system configuration	System continues to run	---
3911xxxx	Warning	Error in system configuration	System continues to run	---
3945xxxx	Warning	Fast shut-off control signal faulty	System continues to run	---
4102xxxx	Warning	CRC error in the configuration	System continues to run	---
4103xxxx	Warning	Module type deviates	System continues to run	---
4104xxxx	Warning	Module version deviates	System continues to run	---
4106xxxx	Warning	Service data object not processed	System continues to run	---
41070020	Warning	Empty gateway mapping for output data is not permitted	System continues to run	Correct the gateway mapping, empty mapping is not permitted for output data.
4107xxxx	Warning	Error in the configuration data	System continues to run	---
4208xxxx	Error	Internal error	System stop; voltage OFF-ON required	Check the gateway mapping, empty mapping is not permitted for output data.
4302xxxx	Info	Service data object not processed	System continues to run	---
4303xxxx	Info	Service data object not processed	System continues to run	---

Error No.	Error type	Logbook message	System behavior	Remedy
4304xxxx	Info	Service data object not processed	System continues to run	---
4305xxxx	Info	Service data object not processed	System continues to run	---
4306xxxx	Info	Service data object not processed	System continues to run	---
4307xxxx	Info	Service data object not processed	System continues to run	---
4309xxxx	Info	Service data object not processed	System continues to run	---
430Bxxxx	Error	Gateway address is outside of the permissible range	System stop; voltage OFF-ON required	---
4501xxxx	Warning	Data loss in the reception memory due to very high bus load	System continues to run	---
4502xxxx	Warning	CAN controller TEC or REC >= 96	System continues to run	---
4503xxxx	Warning	CAN controller TEC or REC > 127	System continues to run	---
4504xxxx	Warning	CAN controller TEC > 255	System continues to run	---
4505xxxx	Warning	Transmission of a message was faulty	System continues to run	---
4506xxxx	Warning	Data loss in transmit buffer due to overload	System continues to run	---
4507xxxx	Error	Initializing was faulty	System stop; voltage OFF-ON required	---
4508xxxx	Warning	Lifeguarding faulty	System continues to run	---
4601xxxx	Error	Faulty stack initializing	System stop; voltage OFF-ON required	---
4602xxxx	Error	A stack error occurred during runtime	System stop; voltage OFF-ON required	---
4603xxxx	Error	An AS protocol error occurred during runtime	System stop; voltage OFF-ON required	Read out the error log in the PLC and eliminate the corresponding protocol error
4604xxxx	Warning	An AS protocol error occurred during runtime	System continues to run	Read out the error log in the PLC and eliminate the corresponding protocol error
4605xxxx	Warning	Incorrect description file, a timeout occurred, or the PLC is not running.	System continues to run	Read out the error log in the PLC, check the cabling and the device description file, note the product code and revision in particular

Error No.	Error type	Logbook message	System behavior	Remedy
50xxxxxx	Warning	Modbus/TCP error	System continues to run	---
51xxxxxx	Warning	PROFINET IO error	System continues to run	---
5201xxxx	Error	Too many Ethernet/IP connections	System continues to run	---
5202xxxx	Warning	Incorrect Ethernet/IP data format	System continues to run	---
5203xxxx	Warning	Incorrect Ethernet/IP data format	System continues to run	---
5204xxxx	Warning	Incorrect Ethernet/IP data size	System continues to run	---
5205xxxx	Warning	Incorrect Ethernet/IP command	System continues to run	---
5206xxxx	Warning	Ethernet/IP read error	System continues to run	---
5209xxxx	Warning	Incorrect Ethernet/IP data index	System continues to run	---
520C00xx	Error	Incorrect Ethernet/IP connection configuration	System continues to run	---
520Fxxxx	Warning	Ethernet/IP timeout	System continues to run	---
52xxxxxx	Warning	Ethernet/IP error	System continues to run	---
60000000	Info	Log file deleted	System continues to run	---
60000005	Info	Device is linked to a project file	System continues to run	---
60000010	Info	Time was reset	System continues to run	---
60000020	Info	IPv4 address and gateway	System continues to run	---
60000030	Info	Log file replaced	System continues to run	---
60000031	Warning	Log file has reached maximum size	System continues to run	Delete log file
63xxxxxx	Warning	USB error	System continues to run	---
640A0001	Warning	SD card cannot be read	Configuration required	---
64xxxxxx	Warning	File system error on SD card	Configuration required	---
650A0001	Warning	IPv4 address conflict	System continues to run	Configure a different IPv4 address
65xxxxxx	Warning	Ethernet error	System continues to run	---

Error No.	Error type	Logbook message	System behavior	Remedy
68080003	Warning	Device is linked to another project file	Configuration required	Use the appropriate project file
68080005	Error	Incorrect activation code	---	---
680A0001	Warning	Power supply A1 too low	Configuration required	---
680B0010	Error	Project file is not activated for this device	Configuration required	Use a different project file
690Fxxxx	Warning	Communication interrupted	System continues to run	---
6A020001	Warning	Communication (Ethernet/USB) disrupted	System continues to run	---
6A04xxxx	Warning	Communication (Ethernet/USB) disrupted	System continues to run	---
6A06xxxx	Warning	TCP socket error	System continues to run	---
6A0Cxxxx	Warning	TCP connection failed	System continues to run	---
6Axxxxxx	Warning	Communication error (Ethernet/USB)	System continues to run	---
6B010001	Error	Cannot read project file project.xml	Configuration required	Use a different project file
6B010002	Error	Cannot write project.xml	---	---
6B010010	Error	Cannot read metadata.xml	---	---
6B03000x	Error	Project file faulty	Configuration required	Use a different project file
6B04xxxx	Warning	Project file faulty	Configuration required	Use a different project file
6B0x001x	Error	metadata.xml faulty	---	---
6Bxxxxxx	Warning	File error	Configuration required	---
7203xxxx	Warning	Module type deviation	Configuration required	---
7204xxxx	Warning	Software version discrepancy	Configuration required	---
7301xxxx	Warning	CRC8 of retrieved ADC value is incorrect	System continues to run	---
7302xxxx	Warning	Status of retrieved ADC value is incorrect	System continues to run	---
7412xxxx	Error	Internal temperature too high	System stop; voltage OFF-ON required	---
7413xxxx	Warning	Internal temperature too low	System continues to run	---
7416xxxx	Warning	Sensor 1: RTD excitation current deviation too high	System continues to run	---
7417xxxx	Warning	Sensor 2: RTD excitation current deviation too high	System continues to run	---
7418xxxx	Warning	Sensor 3: RTD excitation current deviation too high	System continues to run	---

Error No.	Error type	Logbook message	System behavior	Remedy
7419xxxx	Warning	Sensor 4: RTD excitation current deviation too high	System continues to run	---
7440xxxx	Warning	Sensor 1: Value below lower input limit	System continues to run	---
7441xxxx	Warning	Sensor 2: Value below lower input limit	System continues to run	---
7442xxxx	Warning	Sensor 3: Value below lower input limit	System continues to run	---
7443xxxx	Warning	Sensor 4: Value below lower input limit	System continues to run	---
7444xxxx	Warning	Sensor 1: Below configured user range	System continues to run	---
7445xxxx	Warning	Sensor 2: Below configured user range	System continues to run	---
7446xxxx	Warning	Sensor 3: Below configured user range	System continues to run	---
7447xxxx	Warning	Sensor 4: Below configured user range	System continues to run	---
7448xxxx	Warning	Sensor 1: Above configured user range	System continues to run	---
7449xxxx	Warning	Sensor 2: Above configured user range	System continues to run	---
744Axxxx	Warning	Sensor 3: Above configured user range	System continues to run	---
744Bxxxx	Warning	Sensor 4: Above configured user range	System continues to run	---
744Cxxxx	Warning	Sensor 1: Value above upper input limit	System continues to run	---
744Dxxxx	Warning	Sensor 2: Value above upper input limit	System continues to run	---
744Exxxx	Warning	Sensor 3: Value above upper input limit	System continues to run	---
744Fxxxx	Warning	Sensor 4: Value above upper input limit	System continues to run	---
7454xxxx	Warning	Sensor 1: Short-circuit at RTD input	System continues to run	---
7455xxxx	Warning	Sensor 2: Short-circuit at RTD input	System continues to run	---
7456xxxx	Warning	Sensor 3: Short-circuit at RTD input	System continues to run	---
7457xxxx	Warning	Sensor 4: Short-circuit at RTD input	System continues to run	---
7458xxxx	Warning	Sensor 1: RTD is disconnected	System continues to run	---
7459xxxx	Warning	Sensor 2: RTD is disconnected	System continues to run	---

Error No.	Error type	Logbook message	System behavior	Remedy
745Axxxx	Warning	Sensor 3: RTD is disconnected	System continues to run	---
745Bxxxx	Warning	Sensor 4: RTD is disconnected	System continues to run	---
745Cxxxx	Warning	Sensor 1: RTD stuck at high	System continues to run	---
745Dxxxx	Warning	Sensor 2: RTD stuck at high	System continues to run	---
745Exxxx	Warning	Sensor 3: RTD stuck at high	System continues to run	---
745Fxxxx	Warning	Sensor 4: RTD stuck at high	System continues to run	---
7460xxxx	Warning	Sensor 1: Short-circuit at CUR input	System continues to run	---
7461xxxx	Warning	Sensor 2: Short-circuit at CUR input	System continues to run	---
7462xxxx	Warning	Sensor 3: Short-circuit at CUR input	System continues to run	---
7463xxxx	Warning	Sensor 4: Short-circuit at CUR input	System continues to run	---
7464xxxx	Warning	Sensor 1: CUR is disconnected	System continues to run	---
7465xxxx	Warning	Sensor 2: CUR is disconnected	System continues to run	---
7466xxxx	Warning	Sensor 3: CUR is disconnected	System continues to run	---
7467xxxx	Warning	Sensor 4: CUR is disconnected	System continues to run	---
7468xxxx	Warning	Sensor 1: CUR stuck at high	System continues to run	Operate sensor within the work area
7469xxxx	Warning	Sensor 2: CUR stuck at high	System continues to run	Operate sensor within the work area
746Axxxx	Warning	Sensor 3: CUR stuck at high	System continues to run	Operate sensor within the work area
746Bxxxx	Warning	Sensor 4: CUR stuck at high	System continues to run	Operate sensor within the work area

wieland

Wieland Electric GmbH
Brennerstraße 10 – 14
96052 Bamberg · Germany

Phone: +49 951 9324-0
Fax: +49 951 9324-198
info@wieland-electric.com
www.**wieland**-electric.com