product data sheet

item no. 91.951.4253.0

connector GST15I5S B1 ZR1WW GN04

gesis® MINI connector, straight, number of poles 5, female, connection type screw connection, rated voltage 250 V / 400 V, rated current 13 A, cable diameter 7.3 - 12 mm, color of coding/ contact carrier may green



item no.	91.951.4253.0
EAN	4049088039119
order unit	50 piece(s)

certificates / approvals

technical data

general

rated current	13 A
rated voltage	250 V / 400 V
rated impulse voltage	4 kV
strain relief	yes
pollution degree	2
mechanical coding	code 6
lockable	self-locking (unlocking by tool)
color of coding/ contact carrier	may green
Pole codification	1, 2, PE, 3, 4/N
color of housing inclusive strain relief	white
RAL-Nummer Codierung/Kontakteinsatz	6017

connection data

cable diameter max.	12 mm
cable diameter min.	7.3 mm
connection cross section solid mm² max.	2.5 mm²
connection cross section solid mm² min.	0.5 mm²
connection cross section fine stranded mm² max.	2.5 mm²
connection cross section fine stranded mm² min.	0.5 mm²
terminations per pole	1
sheath strip length	32 mm
wire strip length	8 mm

model

model	female
connection type	screw connection

degree of protection (IP)	IP20

material

housing material	polyamide
halogen free	yes
contact material	CuZn
fire load	0.111 kWh/St
insulation components continous temperature	100 °C
surface finish	silver-plated

dimensions

length	78 mm
width	32.6 mm
height	15 mm

technical drawing

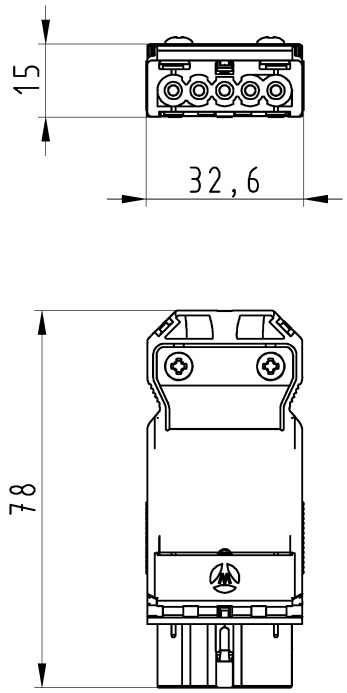

These dimensions will be especially checked at delivery
Only inspection dimensions
With /E marked dimensions are only valid for internal use

Diese Maße werden bei Abnahme besonders geprüft
Ausschließlich Prüfmaße
Mit /E gekennzeichnete Maße sind nur für interne Zwecke gültig

Auslieferungszustand

delivery status

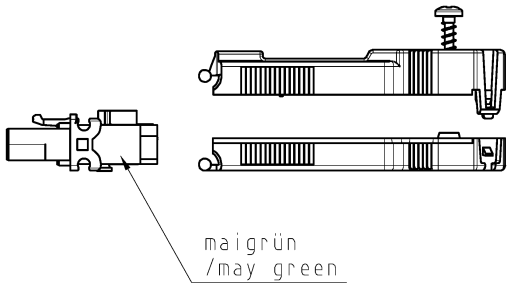

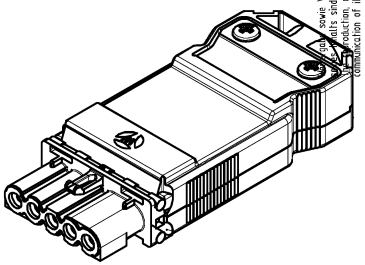

Verpackungseinheit: je 50 Stück
packaging unit: per 50

Bestellnummer /Order number	Typ /Type	Farbe Zugentlastung /color strain relief
91.951.4253.0	GST15i5S B1 ZR1VW GN	weiß /white
91.951.4253.1	GST15i5S B1 ZR1VS GN	schwarz /black

Weitere Daten siehe KATALOG oder eKatalog.
Additional data see CATALOG or eCatalog.

www.wieland-electric.com
eshop.wieland-electric.com

Tolerierung Size ISO 14405Ⓔ/Tolerance system Size ISO 14405Ⓔ.
(This ISO-standard describes the envelope principle. According to the envelope principle the deviations of form and parallelism are limited by the size tolerances).

ja/yes ☒ Stoffverbots- und Deklarationsliste nach WN 5020.010 ist einzuhalten. Conformity with Wieland document WN 5020.010 e (list of prohibited / declarable hazardous substances) to be declared!

Freitoleranz nach
General tolerance

CAD - Zeichnung, keine manuellen Änderungen
CAD - drawing, no manual modifications allowed

1.Verwendung: -
First Use:

Blatt: 1 von 1
Sheet: 1 of 1

Index	Datum / Blatt Date / Sheet	Änderung/Revision
	/	
	/	
	/	
	/	
	/	
	/	
	/	

Maßstab/Scale 1:1

Werkstoff/Material

2015	Tag/Date	Name
gezeichnet drawn	10.08.	Nagengast F.
geprüft checked	-	-
Normgepr. Stand. check	-	-

T

Zeichnung Nr./Drawing No. 91.951.4253.0 13K

Index

Maße in mm/Dimensions are in mm

Vol. mm³ Ofl./Surf. mm²

Ersatz für/Replacement for: -

wieland
www.wieland-electric.com

Type

Benennung/Title

BUCHSENT_M_ZUGENTL

female connector with strain relief
Universal mit PE/ universal with PE

Nachdruck sowie Vervielfältigung dieses Dokuments, Verwertung und Mitteilung des Inhalts sind verboten, soweit nicht ausdrücklich gestattet. Reproduction, distribution and utilization of this document as well as the communication of its contents to others without express authorization is prohibited.