product data sheet

item no. 96.166.2153.6

device connector RST20I6C S1 M13V TB04

RST® CLASSIC device connector, modular, angled 7°, M16, number of poles 6, model male, connection type crimp, rated voltage 250 V / 400 V, rated current 20 A, color of coding/ contact carrier turquoise blue



item no.	96.166.2153.6
EAN	4049088424687
order unit	100 piece(s)

certificates / approvals

technical data

note

note	crimp contacts have to ordered separately (under fits with)positioning realised with flattened thread3 poles max. 20A, 3 poles max. 5A

general

rated current	20 A
rated voltage	250 V / 400 V
pollution degree	3
rated impulse voltage	4 kV
continuity resistor	0.65 mOhm
lockable	self-locking (unlocking by tool)
color of coding/ contact carrier	turquoise blue
Pole codification	L, N, PE, 1, 2, Ls
color of separate adapter (if present)	black

connection data

connection cross section fine stranded mm² max.	2.5 mm²
connection cross section fine stranded mm² min.	0.75 mm²
terminations per pole	1
wire strip length	7 mm

model

model	male
connection type	crimp
connecting thread metric	M16
angle of plug	angled
inclination	7 °
degree of protection (IP)	IP66/68 (3m;2h) /IP69
thickness of housings (electrical device)	0.5 mm
thickness of housings (electrical device)	8 mm

material

housing material	polyamide
halogen free	yes
contact material	CuZn
fire load	0.248 kWh/St
insulation components continous temperature	100 °C
surface finish	silver-plated

dimensions

length	81.8 mm
width	34.6 mm
height	34.6 mm

accessories

item no.	type	description
05.546.3921.8	male contact CRIMP RST20i6/i7 1,0QMM	RST20i7/6 crimp contact, male, 20A, for cross section 0.75 mm² - 1.0 mm²
05.546.4021.8	male contact CRIMP RST20i6/i7 1,5QMM	RST20i7/6 crimp contact, male, 20A, for cross section 1.5 mm²
05.546.4121.8	male contact CRIMP RST20i6/i7 2,5QMM	RST20i7/6 crimp contact, male, 20A, for cross section 2.5 mm²
99.591.0000.7	cover for male connector SW	RST20i7/6 cover piece, for covering unused male connectors, with fastening belt, color black
Z5.569.5353.1	cover for male connector SW	RST20i7/6 cover piece, for covering unused male connectors, color black

technical drawing

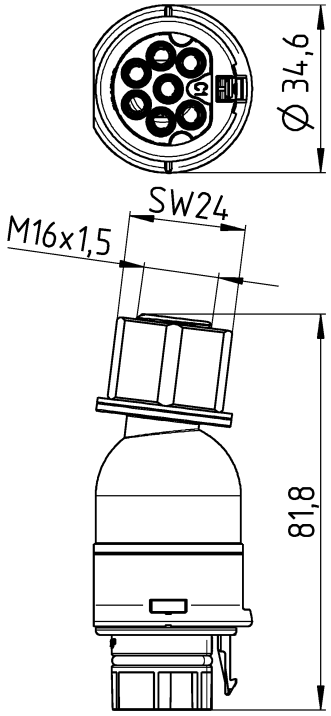

Auslieferungszustand
/delivery status

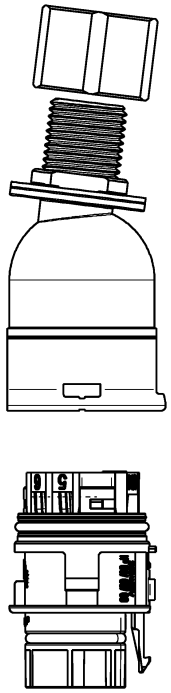

Teile-Nr./ Part no.	Typ/ Type	Kodierung/ coding
96.176.2153.0	RST20I7C S1 M13V GL	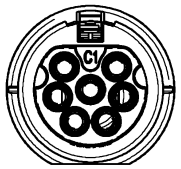
96.176.2153.1	RST20I7C S1 M13V SW	
96.176.2153.9	RST20I7C S1 M13V BL07	
96.166.2153.6	RST20I6S S1 M13V TB04	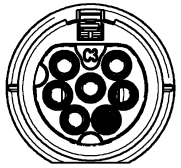
96.176.2153.6	RST20I7S S1 M13V TB04	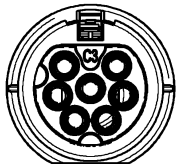

1:2

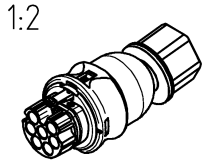

● = Pol verschlossen /pole closed

Tolerierung Size ISO 14405 Ⓔ / Tolerance system Size ISO 14405 Ⓔ.
(This ISO-standard describes the envolope principle. According to the envolope principle the deviations of form and parallelism are limited by the size tolerances).

ja/yes ☒ Stoffverbots- und Deklarationsliste nach WN 5020.010 ist einzuhalten. Conformity with Wieland document WN 5020.010 e (list of prohibited / declarable hazardous substances) to be declared!

Freitoleranz nach General tolerance

CAD - Zeichnung, keine manuellen Änderungen
CAD - drawing, no manual modifications allowed

1. Verwendung: First Use:

Blatt: Sheet: 1 von of 1

/	Werkstoff / Material		Tag/Date	Name	Zeichnung Nr. / Drawing No.	Index
/		gezeichnet drawn	17.11.2017	Hollet	96.176.2153.0 13K	a
/	Maßstab / Scale 1:1	geprüft checked				
/		Normgepr. Stand. check			Maße in mm / Dimensions are in mm	
/	Vol. mm³	Ofl./Srf. mm²	Ersatz für / Replacement for:			
/			Type	Bennenung/Title		
a 14.05.2018 /	wieland www.wieland-electric.com		RST20I	ST_CRIMP male, crimp		
Index Datum / Blatt Date / Sheet						
Änderung / Revision						

Weitergabe sowie Vervielfältigung dieses Dokuments, Verwertung und Mitteilung seines Inhalts sind verboten, soweit nicht ausdrücklich gestattet.
The reproduction, distribution and utilization of this document as well as the communication of its conents to others without express autorization is prohibited.

These dimensions will be especially checked at delivery
Only inspection dimensions
With /E marked dimensions are only valid for internal use

Diese Maße werden bei Abnahme besonders geprüft
Ausschließlich Prüfmaße
M1 /E gekennzeichnete Maße sind nur für interne Zwecke gültig

96_176_2153_0_13K_sheet_1 CADW4030 Hollet 2018-06-18T11:09:34 1.000

QU-MEE-01/14 a