product data sheet

item no. 9L.161.2153.6

device connector RST20I6C 11 M03V TB04

RST® CLASSIC device connector, modular, straight, M16, number of poles 6, model female, connection type crimp, rated voltage 250 V / 400 V, rated current 20 A, longitudinal sealing yes, color of coding/ contact carrier turquoise blue



item no.	9L.161.2153.6
EAN	4049088425691
order unit	100 piece(s)

certificates / approvals

technical data

note

note	crimp contacts have to ordered separately (under fits with)positioning realised with flattened thread3 poles max. 20A, 3 poles max. 5AUse only one connector with contact sealing - either male or female connector.

general

rated current	20 A
rated voltage	250 V / 400 V
pollution degree	3
rated impulse voltage	4 kV
continuity resistor	0.65 mOhm
lockable	self-locking (unlocking by tool)
color of coding/ contact carrier	turquoise blue
Pole codification	L, N, PE, 1, 2, Ls
color of separate adapter (if present)	black

connection data

connection cross section fine stranded mm² max.	2.5 mm²
connection cross section fine stranded mm² min.	0.75 mm²
terminations per pole	1
wire strip length	7 mm

model

model	female
connection type	crimp
connecting thread metric	M16
angle of plug	straight
degree of protection (IP)	IP66/68 (3m;2h) /IP69
longitudinal sealed	yes
thickness of housings (electrical device)	0.5 mm
thickness of housings (electrical device)	8 mm

material

housing material	polyamide
halogen free	yes
contact material	CuZn
fire load	0.225 kWh/St
insulation components continous temperature	100 °C
surface finish	silver-plated

dimensions

length	73 mm
width	34.6 mm
height	34.6 mm

accessories

item no.	type	description
06.562.8753.0	manual disconnect RST20i7 BG	Manual disconnect for later installation of RST20i7/i6 connectors, color concrete gray
02.127.1121.8	female contact CRIMP RST20i6/i7 1,0QMM	RST20i7/6 crimp contact, female, 20A, for cross section 0.75 mm² - 1.0 mm²
02.127.1221.8	female contact CRIMP RST20i6/i7 1,5QMM	RST20i7/6 crimp contact, female, 20A, for cross section 0.75 mm² - 1.5 mm²
02.127.1321.8	female contact CRIMP RST20i6/i7 2,5QMM	RST20i7/6 crimp contact, female, 20A, for cross section 2.5 mm²
99.589.0000.7	cover for female connector SW	RST20i7/6 cover piece, for covering unused female connectors, with fastening belt, color black
Z5.569.5253.1	cover for female connector SW	RST20i7/6 cover piece, for covering unused female connectors, color black

technical drawing

Weitergabe sowie Vervielfältigung dieses Dokuments, Verwertung und Mitteilung seines Inhalts sind verboten, soweit nicht ausdrücklich gestattet.
The reproduction, distribution and utilization of this document as well as the communication of its contents to others without express authorization is prohibited.

These dimensions will be especially checked at delivery

Only inspection dimensions

With /E marked dimensions are only valid for internal use

Diese Maße werden bei Abnahme besonders geprüft

Ausschließlich Prüfmaße

Mit /E gekennzeichnete Maße sind nur für interne Zwecke gültig

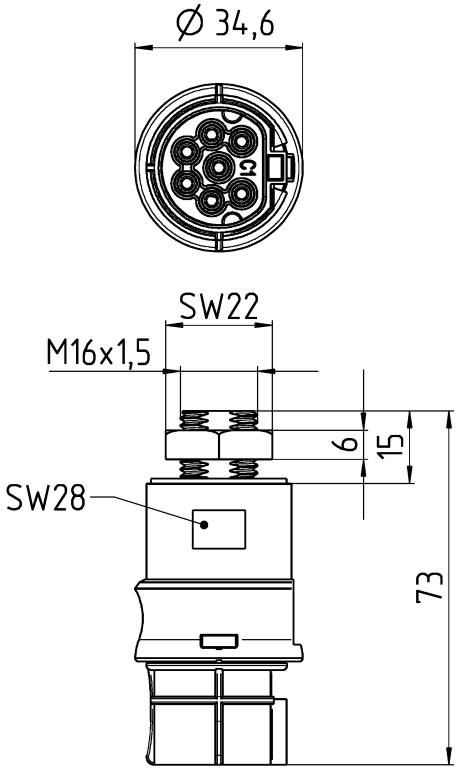

Auslieferungszustand /delivery status

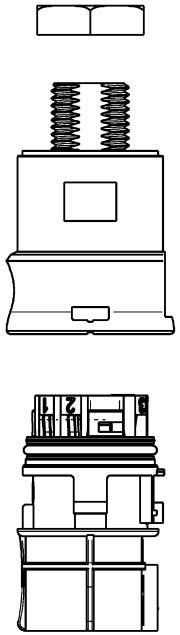

Teile-Nr./ Part no.	Typ/ Type	Kodierung/ coding
96.171.2153.0	RST20I7C B1 M03V GL	
96.171.2153.1	RST20I7C B1 M03V SW	
9L.171.2153.0	RST20I7C 11 M03V GL	
9L.171.2153.1	RST20I7C 11 M03V SW	
96.171.2153.9	RST20I7C B1 M03V BL07	
9L.171.2153.9	RST20I7C 11 M03V BL07	
96.161.2153.6	RST20I6C B1 M03V TB04	
9L.161.2153.6	RST20I6C 11 M03V TB04	
96.171.2153.6	RST20I7C B1 M03V TB04	
9L.171.2153.6	RST20I7C 11 M03V TB04	

1:2

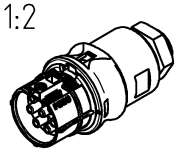

● = Pol verschlossen /pole closed

Tolerierung Size ISO 14405 Ⓔ / Tolerance system Size ISO 14405 Ⓔ.
(This ISO-standard describes the envelope principle. According to the envelope principle the deviations of form and parallelism are limited by the size tolerances).

ja/yes ☒ Stoffverbots- und Deklarationsliste nach WN 5020.010 ist einzuhalten. Conformity with Wieland document WN 5020.010 e (list of prohibited / declarable hazardous substances) to be declared!

Freitoleranz nach General tolerance

CAD - Zeichnung, keine manuellen Änderungen / CAD - drawing, no manual modifications allowed

1. Verwendung: / First Use:

Blatt: 1 von 1 / Sheet: 1 of 1

Werkstoff / Material

Maßstab / Scale: 1:1

	Tag/Date	Name
gezeichnet / drawn	17.11.2017	Hollet
geprüft / checked		
Normgeor. Stand. check		

Zeichnung Nr. / Drawing No.: 96.171.2153.0 13K

Index: a

Maße in mm / Dimensions are in mm

Vol. mm³ Oft./Srf. mm²

Ersatz für / Replacement for:

Index	Datum / Blatt Date / Sheet	Änderung / Revision
a	14.05.2018 /	

wieland
www.wieland-electric.com

Type: RST20

Bennenung/Title: BU_CRIMP
female, crimp