product data sheet

item no. 96.164.0153.6

connector RST20I6C S1 YR2 TB04

RST20i6 Connector, angled 90°, number of poles 6, male, connection type Crimp, rated voltage 250 V / 400 V, rated current 20 A, cable diameter 10 - 14 mm, color of coding/ contact carrier turquoise blue



item no.	96.164.0153.6
EAN	4049088424649
order unit	100 piece(s)

certificates / approvals

technical data

note

note	crimp contacts have to ordered separately (under fits with)3 poles max. 20A, 3 poles max. 5A

general

rated current	20 A
rated voltage	250 V / 400 V
rated impulse voltage	4 kV
strain relief	yes
pollution degree	3
lockable	self-locking (unlocking by tool)
color of coding/ contact carrier	turquoise blue
marking of poles	L, N, PE, 1, 2, Ls
color of housing inclusive strain relief	black

connection data

cable diameter max.	14 mm
cable diameter min.	10 mm
connection cross section fine stranded mm² max.	2.5 mm²
connection cross section fine stranded mm² min.	0.75 mm²
terminations per pole	1
sheath strip length	32 mm
wire strip length	7 mm

model

model	male
connection type	crimp

degree of protection (IP)	IP66/68 (3m;2h) /IP69

material

housing material	polyamide
halogen free	yes
contact material	CuZn
fire load	0.34 kWh
insulation components continous temperature	100 °C
surface finish	silver-plated

dimensions

length	71 mm
width	34.6 mm
height	63.8 mm

accessories

item no.	type	description
05.546.3921.8	male contact CRIMP RST20i6/i7 1,0QMM	RST20i7/6 crimp contact, male, 20A, for cross section 0.75 mm² - 1.0 mm²
05.546.4021.8	male contact CRIMP RST20i6/i7 1,5QMM	RST20i7/6 crimp contact, male, 20A, for cross section 1.5 mm²
05.546.4121.8	male contact CRIMP RST20i6/i7 2,5QMM	RST20i7/6 crimp contact, male, 20A, for cross section 2.5 mm²
99.591.0000.7	cover for male connector SW	RST20i7/6 cover piece, for covering unused male connectors, with fastening belt, color black
Z5.569.5353.1	cover for male connector SW	RST20i7/6 cover piece, for covering unused male connectors, color black

assembly

item no.	type	description
96.161.0153.6	connector RST20I6C B1 ZR2 TB04	RST20i6 Connector, straight, number of poles 6, female, connection type Crimp, rated voltage 250 V / 400 V, rated current 20 A, cable diameter 10 - 14 mm, color of coding/ contact carrier turquoise blue
9L.161.0153.6	connector RST20I6C 11 ZR2 TB04	RST20i6 Connector, straight, number of poles 6, female, connection type Crimp, rated voltage 250 V / 400 V, rated current 20 A, cable diameter 10 - 14 mm, longitudinal sealing yes, color of coding/ contact carrier turquoise blue
96.161.2153.6	device connector RST20I6C B1 M03V TB04	RST20i6 Device connector, modular, straight, M16, number of poles 6, model female, connection type Crimp, rated voltage 250 V / 400 V, rated current 20 A, color of coding/ contact carrier turquoise blue
9L.161.2153.6	device connector RST20I6C 11 M03V TB04	RST20i6 Device connector, modular, straight, M16, number of poles 6, model female, connection type Crimp, rated voltage 250 V / 400 V, rated current 20 A, longitudinal sealing yes, color of coding/ contact carrier turquoise blue
96.161.2053.6	device connector RST20I6C B1 M00V TB04	RST20i6 Device connector, modular, straight, M20, number of poles 6, model female, connection type Crimp, rated voltage 250 V / 400 V, rated current 20 A, color of coding/ contact carrier turquoise blue
9L.161.2053.6	device connector RST20I6C 11 M00V TB04	RST20i6 Device connector, modular, straight, M20, number of poles 6, model female, connection type Crimp, rated voltage 250 V / 400 V, rated current 20 A, longitudinal sealing yes, color of coding/ contact carrier turquoise blue
96.163.2053.6	device connector RST20I6C B1 M90V TB04	RST20i6 Device connector, modular, angled 90°, M20, number of poles 6, model female, connection type Crimp, rated voltage 250 V / 400 V, rated current 20 A, color of coding/ contact carrier turquoise blue
96.163.2253.6	device connector RST20I6C B1 M91V TB04	RST20i6 Device connector, modular, angled 90°, M25, number of poles 6, model female, connection type Crimp, rated voltage 250 V / 400 V, rated current 20 A, color of coding/ contact carrier turquoise blue
96.165.2153.6	device connector RST20I6C B1 M13V TB04	RST20i6 Device connector, modular, angled 7°, M16, number of poles 6, model female, connection type Crimp, rated voltage 250 V / 400 V, rated current 20 A, color of coding/ contact carrier turquoise blue
96.161.2253.6	device connector RST20I6C B1 M01V TB04	RST20i6 Device connector, modular, straight, M25, number of poles 6, model female, connection type Crimp, rated voltage 250 V / 400 V, rated current 20 A, color of coding/ contact carrier turquoise blue
9L.161.2253.6	device connector RST20I6C 11 M01V TB04	RST20i6 Device connector, modular, straight, M25, number of poles 6, model female, connection type Crimp, rated voltage 250 V / 400 V, rated current 20 A, longitudinal sealing yes, color of coding/ contact carrier turquoise blue

technical drawing

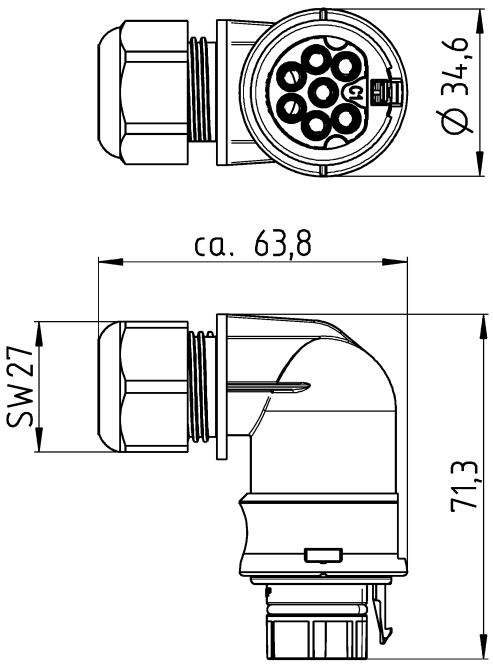

Auslieferungszustand
/delivery status

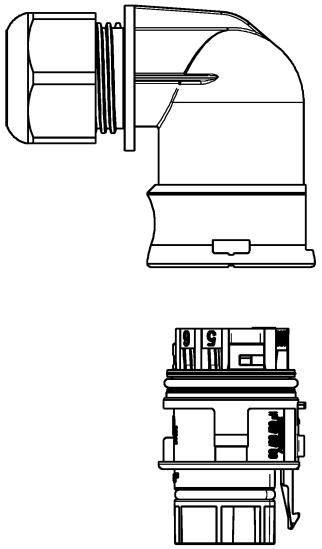

Teile-Nr./ Part no.	Typ/ Type		Kodierung/ coding
96.174.0153.0	RST20I7C S1 YR2	GL	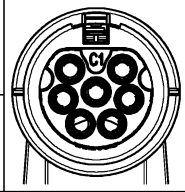
96.174.0153.1	RST20I7C S1 YR2	SW	
96.174.0153.9	RST20I7C S1 YR2	BL07	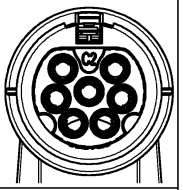
96.164.0153.6	RST20I6C S1 YR2	TB04	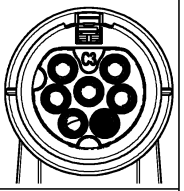
96.174.0153.6	RST20I7C S1 YR2	TB04	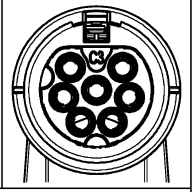

1:2

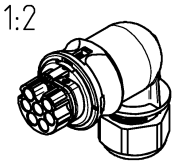

● = Pol verschlossen /pole closed

Weitergabe sowie Vervielfältigung dieses Dokuments, Verwertung und Mitteilung seines Inhalts sind verboten, soweit nicht ausdrücklich gestattet.
The reproduction, distribution and utilization of this document as well as the communication of its conents to others without express autorization is prohibited.

These dimensions will be especially checked at delivery
Only inspection dimensions
With /E marked dimensions are only valid for internal use

Diese Maße werden bei Abnahme besonders geprüft
Ausschließlich Prüfmaße
Mit /E gekennzeichnete Maße sind nur für interne Zwecke gültig

Tolerierung Size ISO 14405 Ⓔ / Tolerance system Size ISO 14405 Ⓔ.
(This ISO-standard describes the envolope principle. According to the envolope principle the deviations of form and parallelism are limited by the size tolerances).

ja/yes ☒ Stoffverbots- und Deklarationsliste nach WN 5020.010 ist einzuhalten. Conformity with Wieland document WN 5020.010 e (list of prohibited / declarable hazardous substances) to be declared!

Freitoleranz nach
General tolerance

CAD - Zeichnung, keine manuellen Änderungen
CAD - drawing, no manual modifications allowed

1. Verwendung:
First Use:

Blatt: 1 von 1
Sheet: 1 of 1

/	Werkstoff / Material		Tag/Date	Name	Zeichnung Nr. / Drawing No.	Index
/		gezeichnet drawn	17.11.2017	Hollet	96.174.0153.0 13K	a
/	Maßstab / Scale 1:1	geprüft checked				
/		Normgepr. Stand. check			Maße in mm / Dimensions are in mm	
/	Vol. mm³	Ofl./Srf. mm²	Ersatz für / Replacement for:			
/			Type	Bennenung/Title		
a 14.08.2018 /	wieland		RST20I	ST_CRIMP		
Index Datum / Blatt Date / Sheet	www.wieland-electric.com			male, crimp		
Änderung / Revision						

96_174_0153_0_13K_sheet_1 CADW4030 Hollet 2018-06-18T10:55:15 1.000

QU-MEE-01/14 a